REVISIONS					
REV	ECO	DESCRIPTION	DATE	BY	APPR
A1	--	RELEASE NEW DRAWING	26/SEP/18	ROOKIE	TOMMY

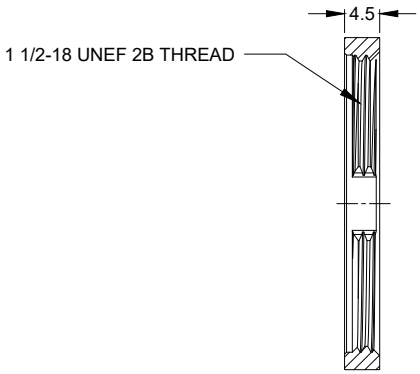

SECTION A-A

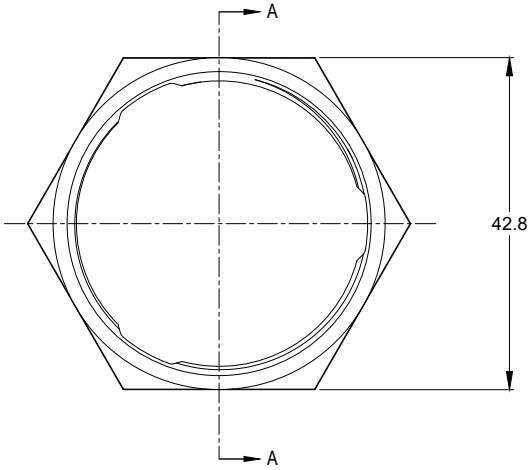

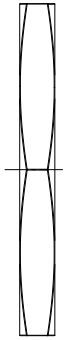

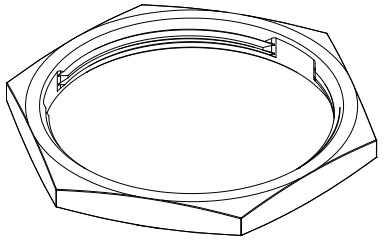

NOTES: UNLESS OTHERWISE SPECIFIED

1. MATERIAL: ALUMINIUM ALLOY,NICKEL PLATED.
2. USE WITH AHDM SERIES SIZE 18 RECEPTACLE.
3. RoHS COMPLIANT.
4. ALL DIMENSIONS ARE FOR REFERENCE USE ONLY.

	A114020-90		
	PART NUMBER	DESCRIPTION	ITEM
QUANTITY	MATERIALS LIST		

UNLESS OTHERWISE SPECIFIED
1) All dimensions are in metric(mm).
2) Tolerances are as follows:
1 PL DEC ±0.30 | Fractions ±1/64
2 PL DEC ±0.15 | Angles ±1°
3 PL DEC ±0.08
3) Note reference = X

MATERIAL SPECIFICATIONS:

PROCESS SPECIFICATIONS:

NEXT ASS'Y:

SIGNATURES		DATE
DRAWN:	ROOKIE	26/SEP/18
CHECKED:	ORION	26/SEP/18
ENGINEER:		
APPROVAL:	TOMMY	26/SEP/18
CUSTOMER:		

THIS DRAWING IS SUPPLIED FOR INFORMATION ONLY. DESIGN FEATURES, SPECIFICATIONS AND PERFORMANCE DATA SHOWN HEREON ARE THE PROPERTY OF THE AMPHENOL CORPORATION. NO RIGHTS OF REPRODUCTION ARE IMPLIED. ALL DIMENSIONS ARE SUBJECT TO NORMAL MANUFACTURING VARIATIONS.

Amphenol
Sine Systems - www.amphenol-sine.com
44724 Morley Drive
Clinton Township, MI 48036

NUT, AHDM SERIES, SIZE 18

SIZE	TYPE	DWG NO:	REVISION
B	C-	A114020-90	A1

SCALE: NONE SHEET 1 OF 1

TITLE: NUT, AHDM SERIES, SIZE 18
DWG NO: A114020-90
REV: A1
SH: 1
OF: 1