Technical Specification

BMR491 series DC-DC Converters Input 48-56 V, Output up to 1400 W (TDP) / 2400 W (peak power)	28701-BMR491 07 Rev B March 2022
	© Flex

Key Features

- Industry standard low profile Quarter-brick 58.4 x 36.8 x 13.8 mm (2.30 x 1.45 x 0.544 in)
- High efficiency, typ. 97.5 % at 54 Vin, half load
- Input to output 1500V isolated, functional
- Thermal design power up to 1400W
- Peak power up to 2400W (≤ 1 second)
- Baseplate to enhance thermal performance
- Black-box functionality
- MTBF over 7 Million hours



General Characteristics

- Input voltage range: 48-56 V
- Output voltage: 12.1 V
- Thermal design current: 116 A (peak 200 A)
- Flex power designer support
- Compliant with PMBus 1.3 version
- Monotonic start-up
- Input and output over voltage protection
- Over temperature protection
- Output short-circuit protection
- Remote control
- Highly automated manufacturing ensures quality
- ISO 9001/14001 certified supplier

Safety Approvals

Design for Environment

Meets requirements in high-temperature lead-free soldering processes.

Contents

Ordering Information 2
General Information 2
Safety Specification 3
Absolute Maximum Ratings 4

Electrical Specification
12.1 V, 116 A / 1400 W BMR491 2307/856 5

EMC Specification 8
Operating Information 12
Thermal Consideration 15
Dimensions and Pinout 16
Mechanical Information 17
Soldering Information 19
Delivery Information 21
Product Qualification Specification 22
PMBus commands 23

flex

Technical Specification

BMR491 series DC-DC Converters Input 48-56 V, Output up to 1400 W (TDP) / 2400 W (peak power)	28701-BMR491 07 Rev B March 2022 © Flex

Ordering Information

Product program	Vin	Output
BMR491 2307 / 856	48 – 56 V	12.1 V / 116 A, 1400 W (TDP – thermal design power), 2400W (peak power), dual side baseplate, thin top baseplate,4-pin digital interface

Product number and Packaging

BMR491	n_1	n_2	n_3	n_4	/	n_5	n_6	n_7	n_8
Mechanical option	x				/				
Baseplate		x			/				
Hardware option			x	x	/				
Configuration file					/	x	x	x	
Delivery package									x

Options	Description
n_1	0 = Standard pin length 5.33 mm(0.210 in.) 2 = Lead length 3.69 mm(0.145 in.) 3 = Lead length 4.57 mm(0.180 in.)
n_2	3 = dual side baseplate, thin top baseplate
n_3 n_4	07 = 48-56 Vin, 12.1 Vout, 1400W (TDP), 2400W (peak power), isolated, 4-pin digital interface
n_5 n_6 n_7	856 = CDA Configuration for 48-56 Vin, 12.1 Vout, 1400W (TDP) & 2400W (peak power)
n_8	*Default = Foam tray xxx = Application Specific Configuration

Example: a 12.1 V/ 1400 W operating at 48-56Vin, through-hole mounted, 3.69mm pin lead length product with dual side baseplate and thin top baseplate, with 4-pin digital interface, and foam tray would be BMR491 2307/856

General Information

Reliability

The failure rate (λ) and mean time between failures (MTBF= $1/\lambda$) is calculated at max output power and an operating ambient temperature (T_A) of +40°C. Flex Power Modules uses Telcordia SR-332 Issue 4 Method 1 to calculate the mean steady-state failure rate and standard deviation (σ).

Telcordia SR-332 Issue 4 also provides techniques to estimate the upper confidence levels of failure rates based on the mean and standard deviation.

Mean steady-state failure rate, λ	Std. deviation, σ
129 nFailures/h	8.4 nFailures/h

MTBF (mean value) for the BMR491 series = 7.74 Mh.
MTBF at 90% confidence level = 7.14 Mh

Compatibility with RoHS requirements

The products are compatible with the relevant clauses and requirements of the RoHS directive 2011/65/EU and 2015/863 and have a maximum concentration value of 0.1% by weight in homogeneous materials for lead, mercury, hexavalent chromium, PBB, PBDE, DEHP, BBP, DBP, DIBP and of 0.01% by weight in homogeneous materials for cadmium.

Exemptions in the RoHS directive utilized in Flex Power Modules products are found in the Statement of Compliance document.

Flex Power Modules fulfills and will continuously fulfill all its obligations under regulation (EC) No 1907/2006 concerning the registration, evaluation, authorization and restriction of chemicals (REACH) as they enter into force and is through product materials declarations preparing for the obligations to communicate information on substances in the products.

Quality Statement

The products are designed and manufactured in an industrial environment where quality systems and methods like ISO 9000, Six Sigma, and SPC are intensively in use to boost the continuous improvements strategy. Infant mortality or early failures in the products are screened out and they are subjected to an ATE-based final test. Conservative design rules, design reviews and product qualifications, plus the high competence of an engaged work force, contribute to the high quality of the products.

Warranty

Warranty period and conditions are defined in Flex Power Modules General Terms and Conditions of Sale.

Limitation of Liability

Flex Power Modules does not make any other warranties, expressed or implied including any warranty of merchantability or fitness for a particular purpose (including, but not limited to, use in life support applications, where malfunctions of product can cause injury to a person's health or life).

© Flex 2022

The information and specifications in this technical specification is believed to be correct at the time of publication. However, no liability is accepted for inaccuracies, printing errors or for any consequences thereof. Flex reserves the right to change the contents of this technical specification at any time without prior notice.

© Flex

Safety Specification

General information

Flex Power DC/DC converters and DC/DC regulators are designed in accordance with the safety standards IEC 62368-1, EN 62368-1 and UL 62368-1 *Audio/video, information and communication technology equipment - Part 1: Safety requirements*

IEC/EN/UL 62368-1 contains requirements to prevent injury or damage due to the following hazards:

- Electrical shock
- Electrically-caused fire
- Injury caused by hazardous substances
- Mechanically-caused injury
- Skin burn
- Radiation-caused injury

On-board DC/DC converters, Power interface modules and DC/DC regulators are defined as component power supplies. As components they cannot fully comply with the provisions of any safety requirements without “conditions of acceptability”. Clearance between conductors and between conductive parts of the component power supply and conductors on the board in the final product must meet the applicable safety requirements. Certain conditions of acceptability apply for component power supplies with limited stand-off (see Mechanical Information for further information). It is the responsibility of the installer to ensure that the final product housing these components complies with the requirements of all applicable safety standards and regulations for the final product.

Component power supplies for general use shall comply with the requirements in IEC/EN/UL 62368-1. Product related standards, e.g. IEEE 802.3af *Power over Ethernet*, and ETS-300132-2 *Power interface at the input to telecom equipment, operated by direct current (dc)* are based on IEC/EN/UL 60950-1 with regards to safety.

Flex Power DC/DC converters, Power interface modules and DC/DC regulators are UL 62368-1 recognized and certified in accordance with EN 62368-1. The flammability rating for all construction parts of the products meet requirements for V-0 class material according to IEC 60695-11-10, *Fire hazard testing, test flames* – 50 W horizontal and vertical flame test methods.

Isolated DC/DC converters

The product may provide basic or functional insulation between input and output according to IEC/EN/UL 62368-1 (see Safety Certificate), different conditions shall be met if the output of a basic or a functional insulated product shall be considered as ES1 energy source.

For basic insulated products (see Safety Certificate) the output is considered as ES1 energy source if one of the following conditions is met:

- The input source provides supplementary or double or reinforced insulation from the AC mains according to IEC/EN/UL 62368-1.
- The input source provides functional or basic insulation from the AC mains and the product’s output is reliably connected to protective earth according to IEC/EN/UL 62368-1.

For functional insulated products (see Safety Certificate) the output is considered as ES1 energy source if one of the following conditions is met:

- The input source provides double or reinforced insulation from the AC mains according to IEC/EN/UL 62368-1.
- The input source provides basic or supplementary insulation from the AC mains and the product’s output is reliably connected to protective earth according to IEC/EN/UL 62368-1.
- The input source is reliably connected to protective earth and provides basic or supplementary insulation according to IEC/EN/UL 62368-1 and the maximum input source voltage is 60 Vdc.

Galvanic isolation between input and output is verified in an electric strength test and the isolation voltage (V_{iso}) meets the voltage strength requirement for basic insulation according to IEC/EN/UL 62368-1.

It is recommended to use a slow blow fuse at the input of each DC/DC converter. If an input filter is used in the circuit the fuse should be placed in front of the input filter. In the rare event of a component problem that imposes a short circuit on the input source, this fuse will provide the following functions:

- Isolate the fault from the input power source so as not to affect the operation of other parts of the system

Protect the distribution wiring from excessive current and power loss thus preventing hazardous overheating

Technical Specification

BMR491 series DC-DC Converters Input 48-56 V, Output up to 1400 W (TDP) / 2400 W (peak power)	28701-BMR491 07 Rev B March 2022
	© Flex

Absolute Maximum Ratings

Characteristics		min	typ	max	Unit
T_{P1}	Operating Temperature (see Thermal Consideration section)	-40		+115	°C
T_S	Storage temperature	-55		+125	°C
V_I	Input voltage	-0.5		+65	V
C_{out}	Output Capacitive Load	270		15000	µF
V_{iso}	Isolation voltage (input to output test voltage)			1500	Vdc
V_{iso}	Isolation voltage (input to base plate test voltage)			1500	Vdc
V_{iso}	Isolation voltage (base plate to output test voltage)			0	Vdc
V_{tr}	Input voltage transient (t_p 100 ms)			+80	V
V_{RC}	Remote Control pin voltage	-0.3		20	V

Stress in excess of Absolute Maximum Ratings may cause permanent damage. Absolute Maximum Ratings, sometimes referred to as no destruction limits, are normally tested with one parameter at a time exceeding the limits in the Electrical Specification. If exposed to stress above these limits, function and performance may degrade in an unspecified manner.

Fundamental Circuit Diagram

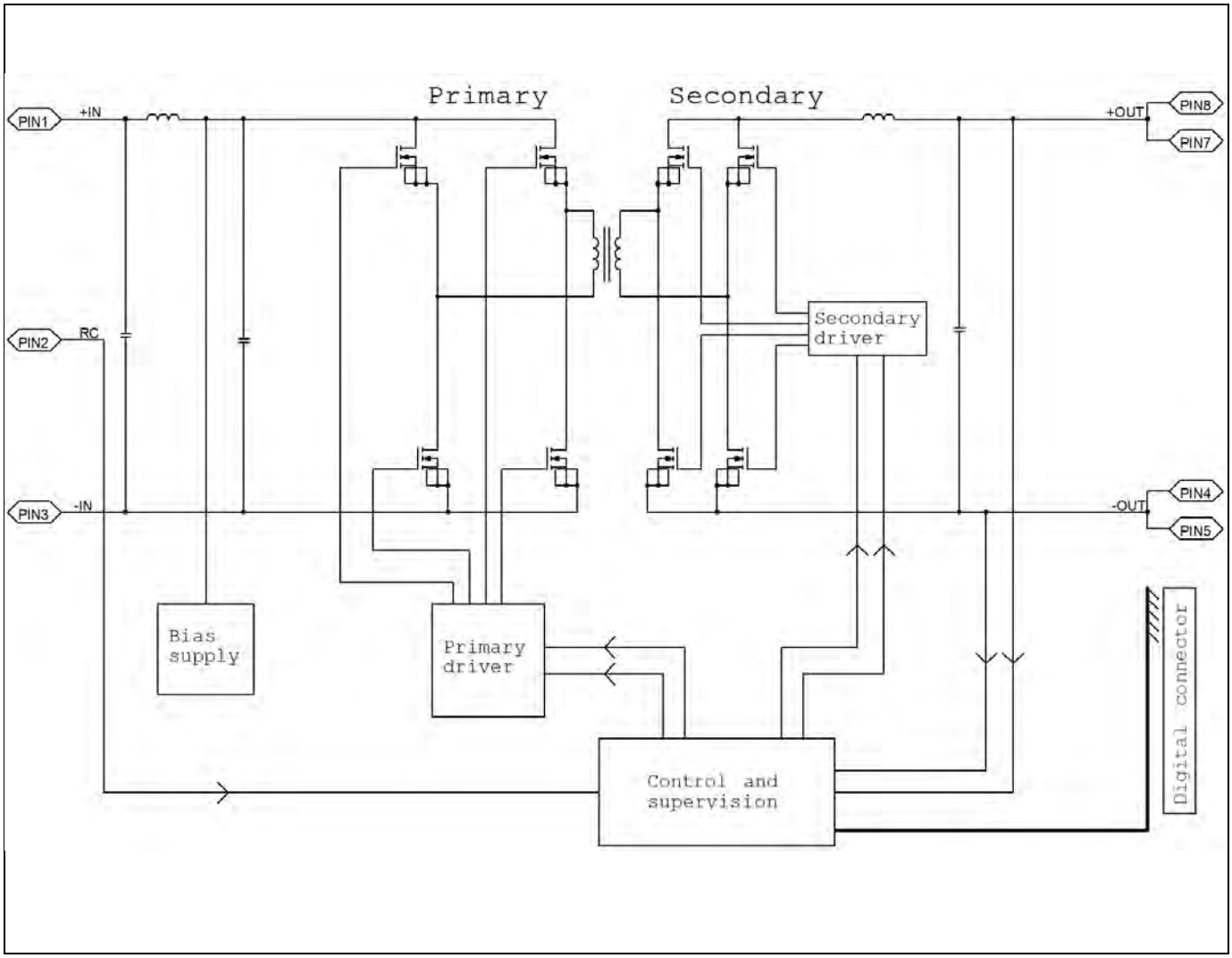

flex

Technical Specification

BMR491 series DC-DC Converters Input 48-56 V, Output up to 1400 W (TDP) / 2400 W (peak power)	28701-BMR491 07 Rev B March 2022
	© Flex

BMR491 2307/856

Electrical Specification
12.1V, 116A (200A) ≤1400W (2400W)

T_{P1} = -30 to +95ºC, V_I = 48 to 56 V, unless otherwise specified under Conditions.
Typical values given at: T_{P1} = +25°C, V_I= 54 V, max P_{OTDP}, unless otherwise specified under Conditions, see Note 1.
Additional C_{out} = 9.4 mF, C_{in} = 0.47 mF

Characteristics		Conditions	min	typ	max	Unit
V_I	Input voltage range		48		56	V
V_{Ioff}	Turn-off input voltage	Decreasing input voltage	42	43	45	V
V_{Ion}	Turn-on input voltage	Increasing input voltage	46	47	48	V
C_I	Internal input capacitance			9.5		µF
P_{OTDP}	Output power (TDP)	V_I ≥ 48 V, See Note 1	0		1400	W
P_{OMAX}	Output power peak (t ≤1s)	V_I ≥ 48 V, See Note 1			2400	W
η	Efficiency	P_O = 50% of P_{OTDP}		97.5		%
		P_O = 100% of P_{OTDP}		97.0		
		P_O = 50% of P_{OTDP}, V_I = 48 V		97.5		
		P_O = 100% of P_{OTDP}, V_I = 48 V		96.9		
P_d	Power Dissipation	P_O = 100% of P_{OTDP}, V_I ≥ 48 V		43	50	W
P_{li}	Input idling power	P_O = 0 W		8.2		W
P_{RC}	Input standby power	(turned off with RC)		1.0		W
F_s	Switching frequency	0-100 % of P_{OTDP}	170	180	190	kHz

V_{Oi}	Output voltage initial setting and accuracy	P_O = 0 W	12.04	12.1	12.16	V
V_O	Output voltage tolerance band	P_O = 0 – 100% of P_{OTDP} V_I = 48 – 56 V	11.4		12.24	V
	Low line input; output voltage tolerance band	P_O = 0 – 100% of P_{OTDP} V_I = 48– 51 V	11.4		12.24	V
	Output adjust range	0-100% of P_{OTDP}	8		13	V
	Idling voltage	P_O = 0 W, V_I = 54 V	12.04		12.16	V
	Idling voltage	P_O = 0 W, V_I = 48 V	11.85		12.12	V
	Line regulation	V_I = 51- 56 V, P_O = 100% of P_{OTDP}		15		mV
	Low input Line regulation	V_I = 48 – 51 V, 100% of P_{OTDP}		550	700	mV
	Load regulation	0 - 100% of P_{OTDP}		25		mV
V_{tr}	Load transient voltage deviation	Load step 20-85-20% of P_{OTDP}, di/dt = 1 A/µs.		±400		mV
t_{tr}	Load transient recovery time			350		µs
t_r	Ramp-up time (from 0−100% of V_{Oi})	0 - 100% of P_{OTDP}		10		ms
t_s	Start-up time (from V_I connection to 90% of V_{Oi})			40		ms
t_{RC}	RC start-up time			11		ms
I_O	Output current	V_I = 48 - 56 V, see Note1	0		200	A
I_{lim}	Current limit threshold	T_{P1} < max T_{P1}	210	235	240	A
I_{sc}	Short circuit current	I_{rms}, see Note 2		3		A
V_{Oac}	Output ripple & noise	See ripple & noise section, max P_{OTDP}		120		mVp-p
OVP	Output over voltage protection			13.3		V

Note 1: The maximum output current is rated to 200A. The maximum power is ≤2400W (t ≤ 1s) and the continuous power (TDP, Thermal Design Power) is ≤1400W, depending on thermal conditions.

Note 2: Hiccup short circuit protection

flex

Technical Specification

BMR491 series DC-DC Converters Input 48-56 V, Output up to 1400 W (TDP) / 2400 W (peak power)	28701-BMR491 07 Rev B March 2022
	© Flex

Typical Characteristics
12.1V, 116A (200A) ≤1400W (2400W)

BMR491 2307/856

Efficiency

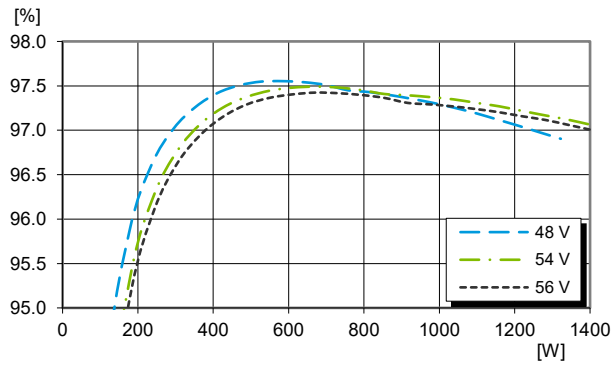

Efficiency vs. load current and input voltage at T_{P1} = +25°C

Power Dissipation

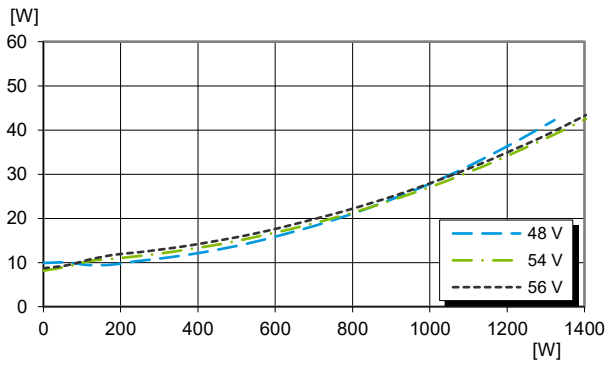

Dissipated power vs. load current and input voltage at T_{P1} = +25°C

Output Power Derating – 1" Heat Sink – 54Vin

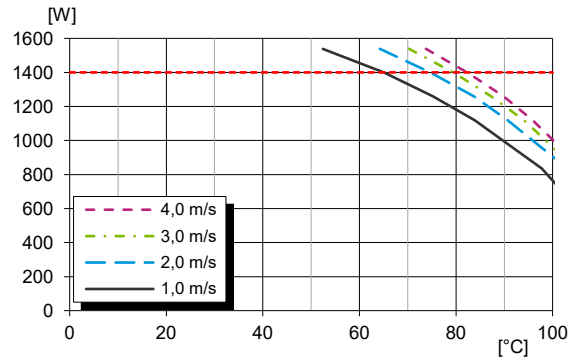

Available output power vs. ambient air temperature and airflow.
See Thermal Consideration section.

Line Characteristics – typical

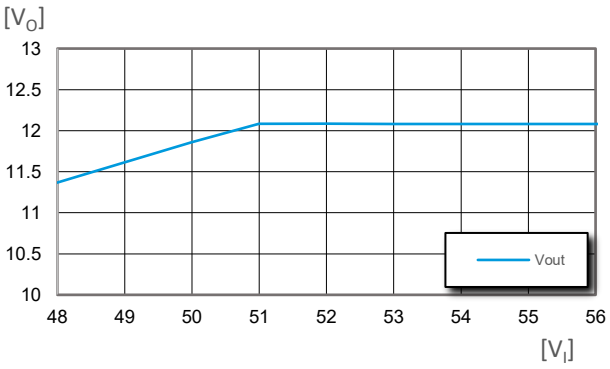

Output voltage vs. input voltage at T_{P1} = +90°C

Available Power

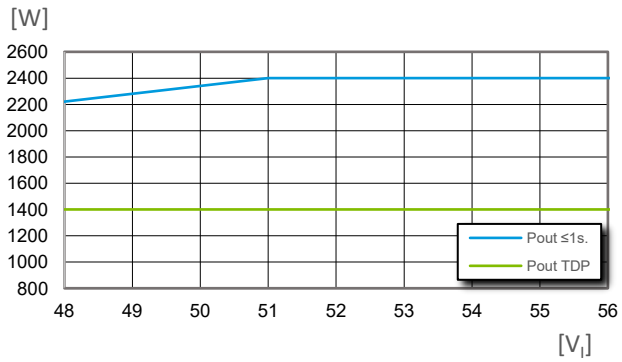

Available output power vs. input voltage , T_{P1} = +90°C

Power loss @ max temperature

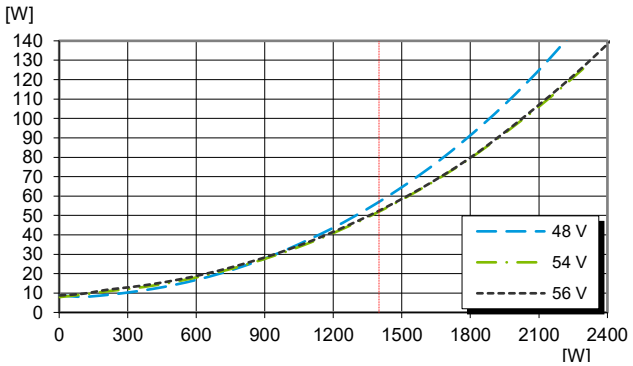

Efficiency vs. load current and input voltage at T_{P1} = +90°C

Technical Specification

BMR491 series DC-DC Converters Input 48-56 V, Output up to 1400 W (TDP) / 2400 W (peak power)	28701-BMR491 07 Rev B March 2022
	© Flex

Typical Characteristics
12.1V, 116A (200A) ≤1400W (2400W)

BMR491 2307/856

Output Current Derating – Cold wall sealed box

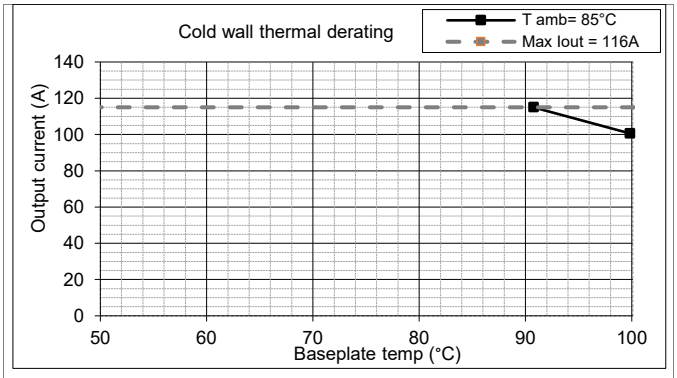

Available output power vs. pin and baseplate temperature
See Thermal Consideration section.

Maximum Output Power

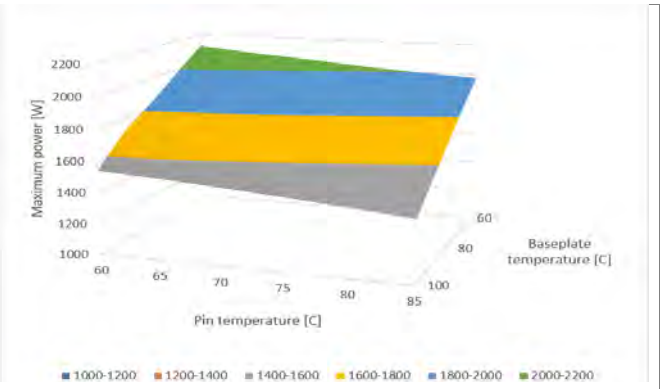

Available output power vs. pin and baseplate temperature
See Thermal Consideration section.

© Flex

EMC Specification

Conducted EMI measured according to EN55022 / EN55032, CISPR 22 / CISPR 32 and FCC part 15J (see test set-up).
The fundamental switching frequency is 180 kHz for BMR491.
The EMI characteristics below is measured at V_I = 54 V and max I_O.

Conducted EMI Input terminal value (typ)

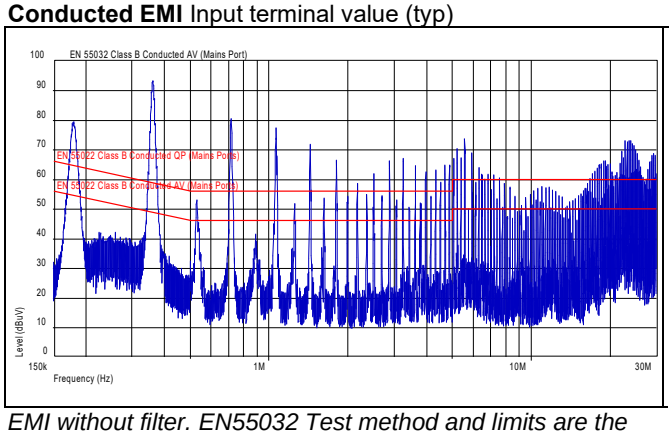

EMI without filter. EN55032 Test method and limits are the same as EN55022. 470 uF 100V input capacitor and 470 uF 16 V OS-CON output capacitor used.

Optional external filter for class B

Suggested external input filter in order to meet class B in EN 55022 / EN 55032, CISPR 22 / CISPR 32 and FCC part 15J.

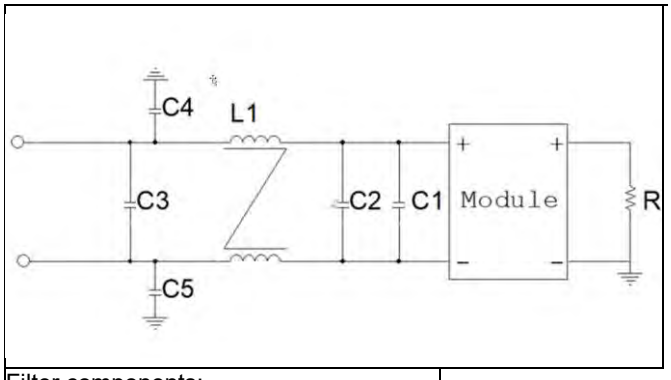

Filter components:
C1 = 470 µF (e-lyt)
C2 = 4 x 10 µF MLCC
C3 = 4 x 4.7uF MLCC
C4, C5 = 4.7 nF MLCC, 1kV, Open fail
L1 = 1.3 mH

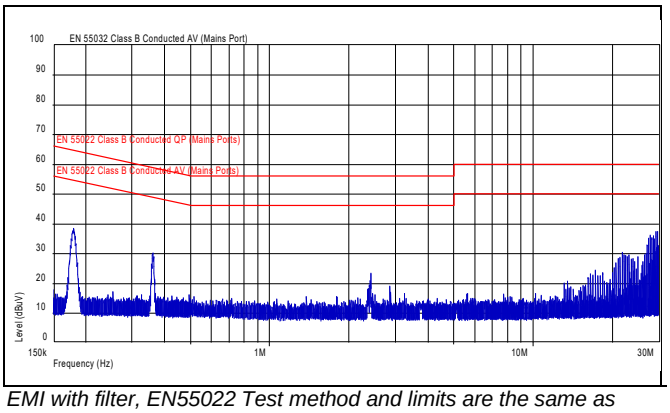

EMI with filter, EN55022 Test method and limits are the same as EN55032.

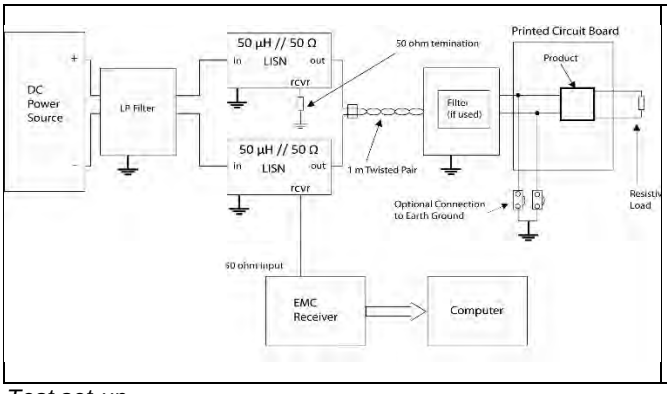

Test set-up.

Layout recommendations

Radiated EMI performance of the product will depend on the PWB layout and ground layer design. It is also important to consider the stand-off of the product. If a ground layer is used, it should be connected to the output of the product and the equipment ground or chassis.

A ground layer will increase the stray capacitance in the PWB and improve the high frequency EMC performance.

Output ripple and noise

Output ripple and noise measured according to figure below. See Design Note 022 for detailed information.

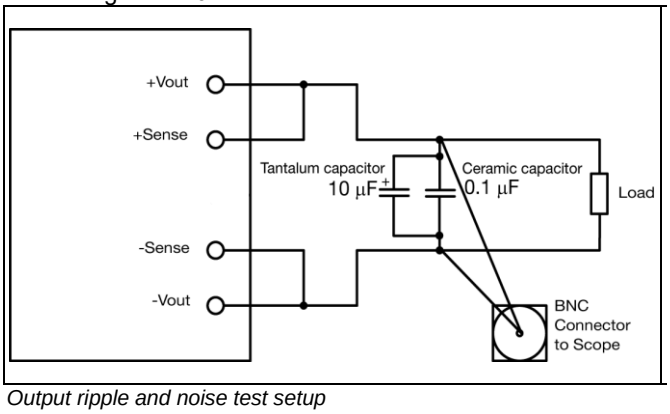

Output ripple and noise test setup

© Flex

Power Management Overview

This product is equipped with a PMBus interface. The product incorporates a wide range of readable and configurable power management features that are simple to implement with a minimum of external components. Additionally, the product includes protection features that continuously safeguard the load from damage due to unexpected system faults. A fault is also shown as an alert on the SALERT pin. Following product parameters can continuously be monitored by a host: Input voltage, output voltage/current, duty cycle and internal temperature.

The product is delivered with a default configuration suitable for a wide range operation in terms of input voltage, output voltage, and load. Configuration is stored in an internal Non-Volatile Memory (NVM). All power management functions can be reconfigured using the PMBus interface

Throughout this document, different PMBus commands are referenced. A detailed description of each command is provided in the appendix at the end of this specification.

Flex Power Designer software suite can be used to configure and monitor this product via the PMBus interface. For more information please contact your local Flex sales representative.

SMBus Interface

This product provides a PMBus digital interface that enables the user to configure many aspects of the device operation as well as to monitor the input and output voltages, output current and device temperature. The product can be used with any standard two-wire I^2C (master must allow for clock stretching) or SMBus host device. In addition, the product is compatible with PMBus version 1.3 and includes an SALERT line to help mitigate bandwidth limitations related to continuous fault monitoring. The product supports 100 kHz and 400 kHz bus clock frequency only. The PMBus signals, SCL, SDA and SALERT require passive pull-up resistors as stated in the SMBus Specification. Pull-up resistors are required to guarantee the rise time as follows:

Eq. 7 $\tau = R_P C_p \leq 1us$

where R_p is the pull-up resistor value and C_p is the bus load. The maximum allowed bus load is 400 pF. The pull-up resistor should be tied to an external supply between 2.7 to 3.8 V, which should be present prior to or during power-up. If the proper power supply is not available, voltage dividers may be applied. Note that in this case, the resistance in the equation above corresponds to parallel connection of the resistors forming the voltage divider.

It is recommended to always use PEC (Packet Error Check) when communicating via PMBus. There is an optional setting that makes PEC required which further increase communication robustness. This can be configured by setting bit 7 in command MFR_SPECIAL_OPTIONS (0xE0).

PMBus Addressing

Following figure and table show recommended resistor values with min and max voltage range for hard-wiring PMBus addresses (series E96, 1% tolerance resistors suggested):

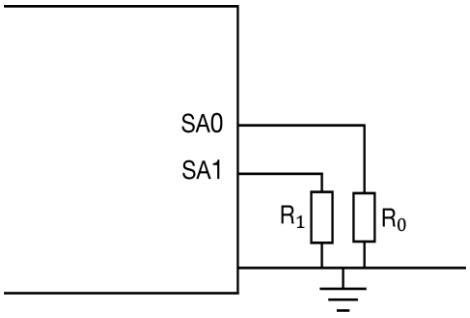

Schematic of connection of address resistors, (SA0 is not used for variants with the 4 pin digital header variant)

SA1 Index	R_{SA1} [kΩ]	Resulting address with MFR_OFFSET_ADDRESS = 96d
0	10	96d (0x60)
1	15	97d (0x61)
2	21	98d (0x62)
3	28	99d (0x63)
4	35.7	100d (0x64)
5	45.3	101d (0x65)
6	56.2	102d (0x66)
7	69.8	103d (0x67)
8	88.7	104d (0x68)
9	107	105d (0x69)
10	130	106d (0x6A)
11	158	107d (0x6B)
12	191	108d (0x6C)
13	≥ 232	109d (0x6D)

SA1 pin can be configured with a resistor to GND according to the following equation.

PMBus Address(decimal) = SA1 index + MFR_OFFSET_ADDRESS

If the calculated PMBus address is 0, 11 or 12, PMBus address 127 is assigned instead. From a system point of view, the user shall also be aware of further limitations of the addresses as stated in the PMBus Specification. It is not recommended to keep the SA1 pin left open. See section MFR_OFFSET_ADDRESS (0xEE) how to set the command to utilize single address pin option. Specific variants may already have a default non-zero value set for MFR_OFFSET_ADDRESS.

© Flex

I²C/SMBus – Timing

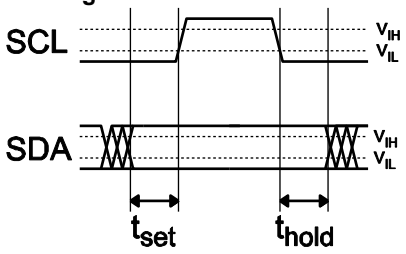

Setup and hold times timing diagram

Setup time, t_{set}, is the time data, SDA, must be stable before the rising edge of the clock signal, SCL. The hold time t_{hold}, is the time data, SDA, must be stable after the rising edge of the clock signal, SCL. If these times are violated incorrect data may be captured or meta-stability may occur and the bus communication may fail. All standard SMBus protocols must be followed, including clock stretching. This product supports the BUSY flag in the status commands to indicate product being too busy for SMBus response. A bus-free time delay between every SMBus transmission (between every stop & start condition) must occur. Refer to the SMBus specification, for SMBus electrical and timing requirements. Note that an additional delay of 5 ms has to be inserted in case of storing the RAM content into the internal non-volatile memory.

Monitoring via PMBus

It is possible to continuously monitor a wide variety of parameters through the PMBus interface. These include, but are not limited to, the parameters listed in the table below.

Parameter	PMBus Command
Input voltage	READ_VIN
Output voltage	READ_VOUT
Output current	READ_IOUT
Temperature *	READ_TEMPERATURE_1
Switching Frequency	READ_FREQUENCY
Duty cycle	READ_DUTY_CYCLE

*Reports the temperature from temperature sensor set in command 0xDC, internal (controller IC)/external (temp sensor).

Monitoring Faults

Fault conditions can be detected using the SALERT pin, which will be asserted low when any number of pre-configured fault or warning conditions occurs. The SALERT pin will be held low until faults and/or warnings are cleared by the CLEAR_FAULTS command, or until the output voltage has been re-enabled. It is possible to mask which fault conditions should not assert the SALERT pin by the command SMBALERT_MASK. In response to the SALERT signal, the user may read a number of status commands to find out what fault or warning condition occurred, see table below.

Fault & Warning Status	PMBus Command
Overview, Power Good	STATUS_BYTE STATUS_WORD
Output voltage level	STATUS_VOUT
Output current level	STATUS _IOUT
Input voltage level	STATUS_INPUT
Temperature level	STATUS_TEMPERATURE
PMBus communication	STATUS_CML
Miscellaneous	STATUS_MFR_SPECIFIC

Black Box/ Event Recorder

Overview

A black box, or history event recorder, is provided to capture brick data at the time of fault occurrence. The intent is to assist in fault diagnosis.

- 48 life cycle & fault & events
  - status flags according to PMBus spec part II rev 1.3
  - life cycle events such as
    - boot
    - fault event recorder erased
    - VinOff/VinOn
    - Vin drop out
- 24 event slots are dedicated for faults
  - Fault events are defined by setting SMBALERT_MASK
  - The default configuration defines following faults:
    - VOUT UV Fault
    - VOUT OV Fault
    - VIN UV Fault
    - VIN OV Fault
    - IOUT UC Fault
    - IOUT OC Fault
    - UT Fault
    - OT Fault
- First in - first out (in case the event recorder was not erased the oldest event gets discarded as new events are recorded)
- When memory is full, the oldest 4 events are erased. A “full” event recorder therefore contains a minimum of 20 fault events and 20 life cycle events.
- Reading the event recorder involves setting the index (PMBus write byte) and reading the indexed event (PMBus read block)
- Ability to clear the section of the event recorder that are dedicated for faults

An event contains following information:

- EventID# < 2^16
- Time stamp 100 ms resolution < 13.6 years
- Status Word, non sticky bits
- Status bytes for all PMBus status registers, non-sticky bits
- Telemetry for Vin, Vout, Iout and temperature (resolution below)

© Flex

Black Box/ Event Recorder resolution for telemetry
Following resolutions are valid

- Vin: 0.5 V
- Vout: 2^(VoutMode+8) V
  - e.g. if VoutMode = -11, Vout resolution is 2^(-11+8) = 2^-3 = 125 mV
- Iout: Resolution depends on IOUT_OC_FAULT_LIMIT
  - e.g. if IOUT_OC_FAULT_LIMIT < 85 A, Iout resolution is 0.5 A)
- Temperature: 1 °C

Unit off status codes
Applies only to the life cycle section of the event recorder

When the Status Word in an event is 0x0040 (Unit off) the StatusMfr byte indicates if the unit was turned on or off and with what source.

NS_UNIT_IS_OFF (cfg)	0
NS_UNIT_IS_OFF (priRC)	1
NS_UNIT_IS_OFF (secRC)	2
NS_UNIT_IS_OFF (PMBus)	3
NS_UNIT_IS_ON (cfg)	4
NS_UNIT_IS_ON (priRC)	5
NS_UNIT_IS_ON (secRC)	6
NS_UNIT_IS_ON (PMBus)	7

Power Good status codes
Applies only to the life cycle section of the event recorder
When the Status Word in an event is 0x0800 (Power Good) the StatusMfr byte indicates if PG was asserted or de-asserted. 0 means power is not good, 1 means power is good

Manufacturer status codes (StatusMfr)
When status word is 0x0001 a system event is reported in the StatusMfr byte:

- 0x01 BOOT_EVENT
- 0x02 INPUT_LOW_ EVENT
- 0x04 CANCEL_EVENT
- 0x08 ERASE_EVENT
- 0x10 CLR_EVENT
- 0x20 ERASE_OVFL_EVENT

All codes apply to the life cycle section of the event recorder. Only INPUT_LOW_DETECT, CANCEL_EVENT and ERASE_OVFL_EVENT apply to the fault section of the event recorder.

- BOOT_EVENT records time data when needed
- An INPUT_LOW_ EVENT might be recorded at shut down. The purpose of this event is to store time data at shutdown unless it has already been stored
- Maximum time between two events is 2.1 years. A time out will be recorded as a CANCEL_EVENT
- An ERASE_EVENT is recorded in the life cycle section when the fault section is cleared
- A CLR_EVENT is recorded in the life cycle section when a CLEAR_FAULTS command is sent to the unit
- An ERASE_OVFL_EVENT indicates that the event recorder was overloaded while erasing old records but did recover

Reading the event recorder
EVENT_INDEX
Writing to this command sets current index to read by the READ_EVENT command. It also provides means to clear the fault section of the event recorder and finding the newest event (equal to number of events stored in the event recorder)

Write byte	Read after write
0 – 47	same value as written.
254	Index of newest record in the life cycle section of the event recorder.
255	Index of newest record in the fault section of the event recorder.
0xAA	0xAA. The fault section of the event recorder is cleared.

For all the above; READ_EVENT is prepared for reading the index that was written.
Index 0-23 refers to the fault section of the event recorder
Index 24-47 refers to the life cycle section of the event recorder

READ_EVENT
One event, prepared by writing to EVENT_INDEX, read as a 23 byte block.

Notes

- When clearing the fault section of the event recorder, the event id number is reset but time stamp data is kept
- Clearing the fault section of the event recorder takes typically 121 ms. During this time fault handling is disabled and a PMBus host must not access the unit.
- Reading an empty event will return 0xFF in all bytes.
- Setting up the event record (after indexing with the EVENT_INDEX command) takes typically 30 us. Reading within this time frame will return unpredictable result.

PMBus command details
EVENT_INDEX (read/write byte 0xDB)
Offset value 0-47. 0 is always the oldest event in the fault section of the event recorder. 24 is the oldest event in the life cycle section. For other options see above.

Start	Device Address & R/W	Command byte 0xDB	*Index value (byte)*	PEC	Stop

READ_EVENT (read block 0xD7)

Start	Device Address & W	Command Code 0xD7	Repeated start	Device Address & R	Block count = 23
EventID# (high byte)		EventID# (low byte)	TimeStamp (byte3)	TimeStamp (byte2)	
TimeStamp (byte1)		TimeStamp (byte0)	StatusWord (high byte)	StatusWord (low byte)	
StatusVout		StatusIout	StatusInput	StatusTemperature	
StatusCML		StatusOther	StatusMfr	VinValue (high byte)	
VinValue (low byte)		VoutValue (high byte)	VoutValue (low byte)	IoutValue (high byte)	
IoutValue (low byte)		TemperatureValue (high byte)	TemperatureValue (low byte)	PEC	Stop

© Flex

Non-Volatile Memory (NVM)
The product incorporates two Non-Volatile Memory areas for storage of the PMBus command values; the Default NVM and the User NVM. Default NVM is pre-loaded with Flex factory default values. Default NVM is write-protected and can be used to restore the Flex factory default values through the command RESTORE_DEFAULT_ALL (0x12).
User NVM is pre-loaded with Flex factory default values. User NVM is writable and open for customization. Values in NVM are loaded during initialization according to section Initialization Procedure, where after commands can be changed through the PMBus Interface.
STORE_USER_ALL (0x15) command will store the changed parameters to the User NVM.

Operating Information

Input Voltage
Input voltage range 48 to 60 Vdc meets the requirements for normal input voltage range in –48 Vdc systems, -50.0 to -58.0 V. At input voltages exceeding 60 V, the power loss will be higher than at normal input voltage and T_{P1} must be limited to absolute max +115°C. The absolute maximum continuous input voltage is 64 Vdc.

Short duration transient disturbances can occur on the DC distribution and input of the product when a short circuit fault occurs on the equipment side of a protective device (fuse or circuit breaker). Voltage level, duration and energy of the disturbance are dependent on the particular DC distribution network characteristics and can be sufficient to damage the product unless measures are taken to suppress or absorb this energy. Transient voltage can be limited by capacitors and other energy absorbing devices like zener diodes connected across the positive and negative input conductors at a number of strategic points in the distribution network.
End-user must secure that the transient voltage will not exceed the value stated in the Absolute maximum ratings.
ETSI TR 100 283 examines the parameters of DC distribution networks and provides guidelines for controlling the transient and reduce its harmful effect.

Turn-on and -off Input Voltage
Product monitors the input voltage and will turn on and turn off at configured thresholds (see Electrical Specification). Turn-on input voltage voltage threshold is set higher than the corresponding turn-off threshold. Hence, there is a hysteresis between turn-on and turn-off input voltage levels.

Remote Control (RC)

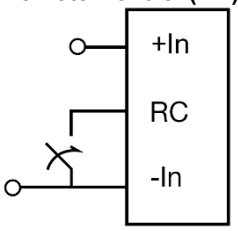

Products are fitted with a remote control function referenced to the primary negative input connection (-In), with negative and positive logic options available. RC function allows the product to be turned on/off by an external device like a semiconductor or mechanical switch.

RC pin has an internal pull up resistor.

External device must provide a minimum required sink current >0.5 mA to guarantee a voltage not higher than maximum voltage on the RC pin (see Electrical characteristics table). When the RC pin is left open, the voltage generated on the RC pin is max 5 V. Standard product is provided with “negative logic” RC and will be off until the RC pin is connected to the –In. To turn off the product the RC pin should be left open. In situations where it is desired to have the product to power up automatically without the need for control signals or a switch, the RC pin shall be wired directly to –In.

Remote Control (secondary side)
CTRL-pin can be configured as remote control via the PMBus interface. In the default configuration the CTRL-pin is disabled and floating. Output can be configured to internal pull-up to 3.3 V using the MFR_MULTI_PIN_CONFIG (0xF9) command. Logic options for the secondary remote control can be positive or negative logic. Logic option for the secondary remote control is easily configured via ON_OFF_CONFIG (0x02) using Flex Power Designer software command, see also MFR_MULTI_PIN_CONFIG section. When not used it is recommended to connect the CTRL pin to DGND.

Peak Power Considerations

DC/DC converter have a peak capability t≤1sec in order to handle higher power than the thermal design power (TDP) for the converter. In the peak power area the power loss increases. Extended use of peak power capability will cause increase heating of the converter. A guideline is that the average power-loss of the converter during a 10sec period not exceeding the maximum TDP power-loss. Overload protections do not monitor the average power and will not actively limit the power over time. For further assistance, contact your local Flex Power Modules representative.

Input and Output Impedance
Impedance of both the input source and the load will interact with the impedance of the product. It is important that the input source has low characteristic impedance. Minimum recommended external input capacitance is 270 µF. Electrolytic capacitors will be degraded in low temperature. Needed input capacitance in low temperature should be equivalent to 270 µF at 20°C. Performance in some

© Flex

applications can be enhanced by addition of external capacitance as described under External Decoupling Capacitors. If the input voltage source contains significant inductance, the addition of a low ESR ceramic capacitor of 22 – 100 µF capacitor across the input of the product will ensure stable operation. The minimum required capacitance value depends on the output power and the input voltage. The higher output power the higher input capacitance is needed.

A minor leakage current in standby mode might over time build up a few volts if not taken care of with external load.

External Decoupling Capacitors

When powering loads with significant dynamic current requirements, the voltage regulation at the point of load can be improved by addition of decoupling capacitors at the load. The most effective technique is to locate low ESR ceramic and electrolytic capacitors as close to the load as possible, using several parallel capacitors to lower the effective ESR. Ceramic capacitors will handle high-frequency dynamic load changes while the electrolytic capacitors are used to handle low frequency dynamic load changes. It is equally important to use low resistance and low inductance PWB layouts and cabling.

External decoupling capacitors will become part of the product's control loop. The control loop is optimized for a wide range of external capacitance and the maximum recommended value that could be used without any additional analysis is found in the Electrical specification.
ESR of the capacitors is a very important parameter. Stable operation is guaranteed with a verified ESR value of >1 mΩ across the output connections.
For further information please contact your local Flex Power Modules representative.

PMBus configuration and support

The product provides a PMBus digital interface that enables the user to configure many aspects of the device operation as well as monitor the input and output parameters.
Flex Power Designer software suite can be used to configure and monitor this product via the PMBus interface. For more information, please contact your local Flex sales representative.

Output Voltage Adjust using PMBus

Output voltage of the product can be reconfigured via PMBus command VOUT_COMMAND (0x21) or VOUT_TRIM (0x22). This can be used when adjusting the output voltage above or below output voltage initial setting up to a certain level, see Electrical specification for adjustment range.
When increasing the output voltage, the voltage at the output pins must be kept within the plotted area, see graph. Output voltage setting must be kept below the threshold of the over voltage protection, (OVP) to prevent the product from shutting down. At increased output voltages the maximum power rating of the product remains the same, and the max output current must be decreased correspondingly. According to below graph the BMR491 is operating at max duty cycle where the output voltage start to droop.
Green curve in graph below shows max trimmable Vout for 10.4V output voltage versions.

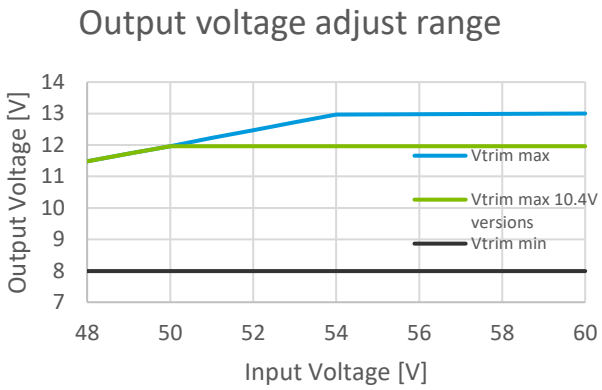

Margin Up/Down Controls

These controls allow the output voltage to be momentarily adjusted, either up or down, by a nominal 10%. The margin high and margin low shall be limited to max and min output voltage if the nominal output voltage is changed. This provides a convenient method for dynamically testing the operation of the load circuit over its supply margin or range. It can also be used to verify the function of supply voltage supervisors.
Margin up and down levels of the product can easily be re-configured using Flex Power Designer software.

Soft-start Power Up

Default rise time for a single product is 10 ms. When starting by applying input voltage the control circuit boot-up time adds an additional 30 ms delay. soft-start and soft-stop control functionality allows the output voltage to ramp-up and ramp-down with defined timing with respect to the control of the output. This can be used to control inrush current and manage supply sequencing of multiple controllers.
Rise time is the time taken for the output to ramp to its target voltage, while the fall time is the time taken for the output to ramp down from its regulation voltage to 0 V. TON_DELAY (0x60) time sets a delay from when the output is enabled until the output voltage starts to ramp up. TOFF_DELAY (0x64) delay time sets a delay from when the output is disabled until the output voltage starts to ramp down.
For modules intended for paralell operation the TON_DELAY (0x60) is set to 200ms to ensure a stable startup for all paralleled devices.
Before module initiates startup sequence it checks for any parameters exceeding fault levels that could affect startup.

© Flex

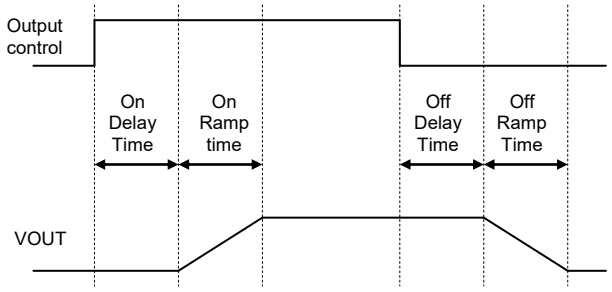

Illustration of Soft-Start and Soft-Stop.

By default, soft-stop is disabled, and the regulation of output voltage stops immediately when the output is disabled. Soft-stop can be enabled through the PMBus command ON_OFF_CONFIG (0x02). The delay and ramp times can be reconfigured using the PMBus commands TON_DELAY (0x60), TON_RISE (0x61), TOFF_DELAY (0x64) and TOFF_FALL (0x65).

Pre-bias Start-up

The product has a Pre-bias start up functionality and will not sink current during start up if a pre-bias source is present at the output terminals. If the Pre-bias voltage is lower than the target value set in VOUT_COMMAND (0x21), the product will ramp up to the target value. If the Pre-bias voltage is higher than the target value set in VOUT_COMMAND (0x21), the product will ramp down to the target value and in this case sink current for a time interval set by the command TOFF_MAX_WARN_LIMIT (0x66).

Over/Under Temperature Protection (OTP, UTP)

Products are protected from thermal overload by an internal over temperature sensor.
The product will make continuous attempts to start up (non-latching mode) and resume normal operation automatically when the temperature has dropped below the temperature threshold set in command OT_WARN_LIMIT (0x51).
In the temperature readout (0x8D) range between OT_WARN_LIMIT (0x51) and OT_FAULT_LIMIT (0x4F) the module will not start-up.
If for any reason the module needs to start or restart, it will wait until the temperature readout value is below the value of OT_WARN_LIMIT.
This includes restarts initiated by OCP, input and output OVP or any other protection as well as Vin and remote control.
OTP and hysteresis of the product can be re-configured using the PMBus interface. The product has also an under-temperature protection. OTP and UTP fault limit and fault response can be configured via the PMBus. Note: using the fault response “continue without interruption” may cause permanent damage to the product.

Input Over/Under Voltage Protection

The product can be protected from high input voltage and low input voltage by a pre-configured value with a response time of 100us. Over/under-voltage fault level and fault response is easily configured using Flex Power Designer software, see also Appendix – PMBus commands.

Output Over Voltage Protection (OVP)

Products includes over voltage limiting circuitry for protection of the load. The default OVP limit is 17% above the nominal output voltage but customer specific OVP limits are available. If the output voltage exceeds the OVP limit, the product can respond in different ways.
The default response from an over voltage fault is to immediately shut down. The device will continuously check for the presence of the fault condition, and when the fault condition no longer exists the device will be re-enabled.
OVP fault level and fault response can be configured via the PMBus interface, see Appendix – PMBus commands.

Over Current Protection (OCP)

Current limiting circuitry for protection at continuous overload is included. For standard configuration the output current is measured through a built in shunt on secondary side and the shunt voltage is measured by the controller. Over current limit is set in command IOUT_OC_FAULT_LIMIT (0x46).
Shutdown and automatic restart will occur for output currents in excess of max output current (max I_O). The product will resume normal operation after removal of the overload. Load distribution should be designed for the maximum output short circuit current specified.
Over current protection of the product can be configured via the PMBus interface, see Appendix – PMBus commands.

Switching frequency

Switching frequency is set to 180kHz as default but this can be reconfigured via the PMBus interface. The product is optimized at this frequency, but can run at lower and higher frequency (150kHz-230kHz). Electrical performance can be affected if the switching frequency is changed.

Power Good

Power good indicates when the product is ready to provide regulated output voltage to the load. During ramp-up and during a fault condition, PG is held high. By default, PG is asserted low after the output has ramped to a voltage above 8V, and de-asserted if the output voltage falls below 5V. These thresholds may be changed using the PMBus commands POWER_GOOD_ON (0x5E) and POWER_GOOD_OFF (0x5F).

By default, the PG pin is configured as Push/pull output, but it is also possible to set the output in open drain mode by the command MFR_MULTI_PIN_CONFIG (0xF9), see Appendix – PMBus commands.
The polarity is by default configured to active low, the polarity of PG can be set to active high in the command MFR_PGOOD_POLARITY (0xD0):
0xD0 = 00 (active low)
0xD0 = 01 (active high)

Products provides Power Good flag in the Status Word register that indicates the output voltage is within a specified tolerance of its target level and no-fault condition exists.

It is not recommended to use Push-pull when paralleling PG-pins.

© Flex

Multi pin configuration
MFR_MULTI_PIN_CONFIG (0xF9) command can be re-configured using the PMBus interface to enable or disable different functions and set the pin configuration of the digital header (pin 6-15). Standard configuration for stand-alone product is set to Power Good Push/pull (0x04).
Products that are configured for parallel operation have Power Good configured to Open Drain (0x06).
MULTI_PIN_CONFIG is easily configured using Flex Power Designer, see Appendix – PMBus commands.

Address Offset
Command MFR_OFFSET_ADDRESS (0xEE) is used to configure an address offset. PMBus-address offset's value increments the address value following the formula in the PMBus Addressing section of documentation.

Thermal Consideration

General

The products are designed to operate in different thermal environments and sufficient cooling must be provided to ensure reliable operation.

These high output power modules require external cooling such as heat sink or cold wall.
Wind speed and temperature are measured in a point upstream the device. Output Current Derating graph found in the Output section for each model provides the available output current vs. ambient air temperature and air velocity at V_I = 54 V.

For products using any form of heat sink structure a top spacing board and side airflow guides are used to ensure airflow hitting the module and not diverted away.
Distance between the tested device and the top space board and the side airflow guides are 6.35mm ± 1mm.

Product is tested on a 254 x 254 mm, 35 µm (1 oz), 16-layer test board mounted vertically in a wind tunnel.

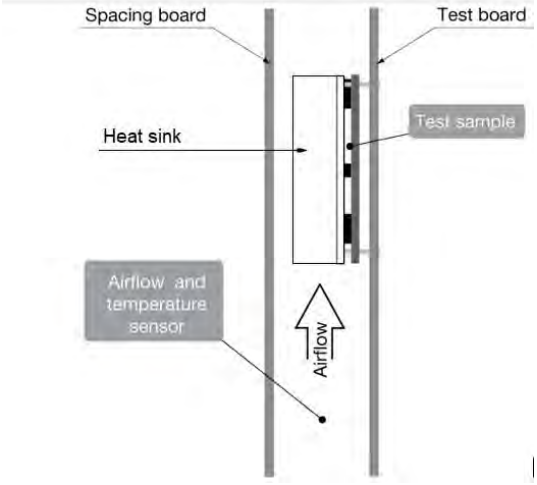

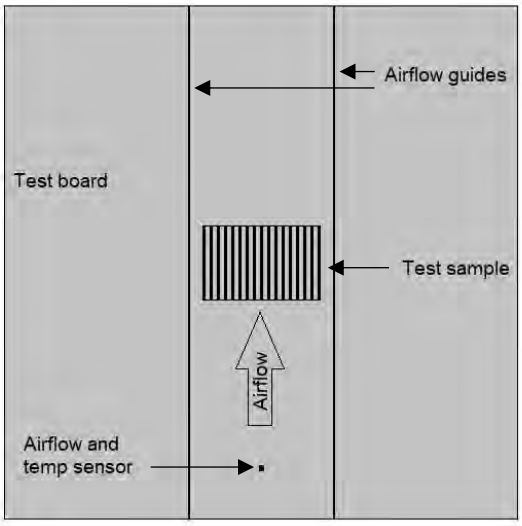

For products with base plate used in a sealed box/cold wall application, cooling is achieved mainly by conduction through the cold wall. Output Current Derating graphs are found in the Output section for each model. The product is tested in a sealed box test set up with ambient temperatures 85°C. See Design Note 028 for further details.

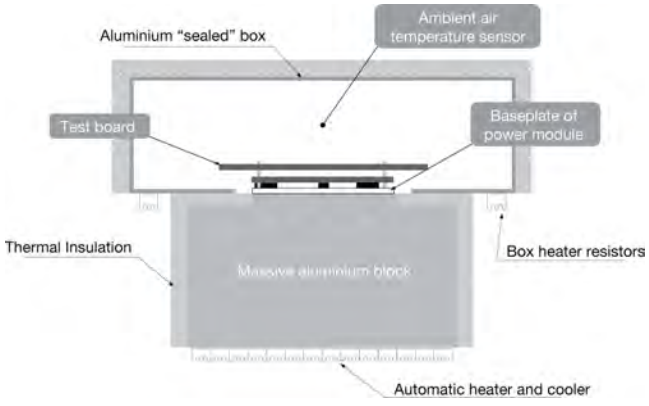

3D graph is useful for applications where the converter is connected to a low thermal impedance such as a large heatsink or water-cooled cold plate.

Graph shows the maximum power that can be obtained without exceeding maximum temperature for P1. One axis represents the baseplate temperature, the other +OUT pin temperature (where it approaches the application board).

© Flex

Definition of product operating temperature
Product operating temperatures is used to monitor the temperature of the product, and proper thermal conditions can be verified by measuring the temperature at position P1. Temperature at these positions (T_{P1}) should not exceed the maximum temperatures in the table below. The number of measurement points may vary with different thermal design and topology. Temperatures above maximum T_{P1}, measured at the reference point P1 are not allowed and may cause permanent damage.

Position	Description	Max Temp.
P1	PCB Pin side	T_{P1}=115º C

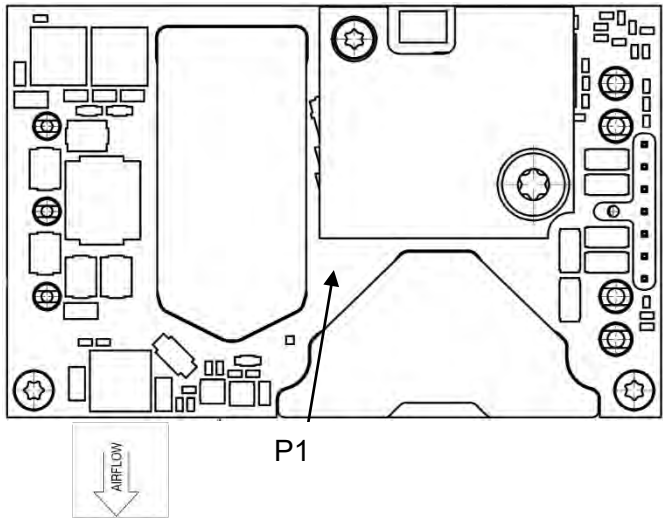

Bottom view

Connections (Bottom view)

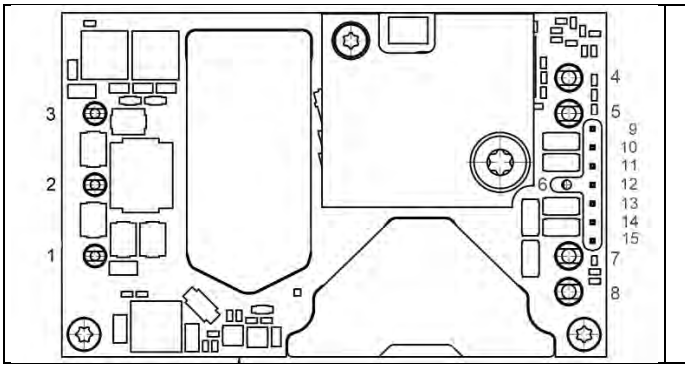

Pin	Designation	Function 4 pin	Function 7 pin
1	+In	Positive Input	Positive Input
2	RC	Remote Control	Remote Control
3	-In	Negative Input	Negative Input
4	-Out	Negative Output	Negative Output
5	-Out	Negative Output	Negative Output
6	PG	Populated on request	Populated on request
7	+Out	Positive Output	Positive Output
8	+Out	Positive Output	Positive Output
9*	PG/CTRL	**Not Mounted**	**Power Good**/SYNC or PMBus remote control or Current Share
10*	DGND/ -SENSE	**Not Mounted**	Digital Ground/ **Negative Remote Sense**
11	SDA	PMBus Data	PMBus Data
12	SALERT	PMBus alert signal	PMBus alert signal
13	SCL	PMBus Clock	PMBus Clock
14*	SA0/SA1	PMBus Address 1	PMBus Address 0/ **PMBus Address 1**
15*	SA0/+SENSE	**Not Mounted**	PMBus Address 0/ **Positive Remote Sense**

* Hardware configurated, default values in bold text

flex

Technical Specification

BMR491 series DC-DC Converters Input 48-56 V, Output up to 1400 W (TDP) / 2400 W (peak power)	28701-BMR491 07 Rev B	March 2022
	© Flex	

BMR 491 x3xx /xxx - Hole mounted, Baseplate version

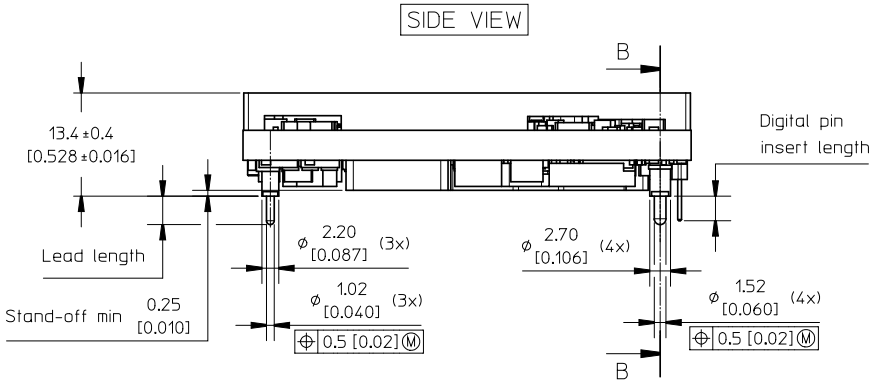

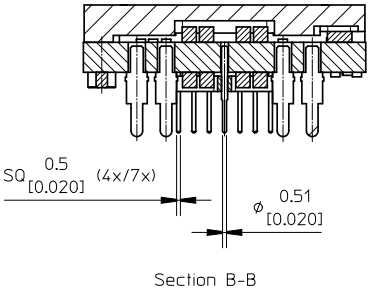

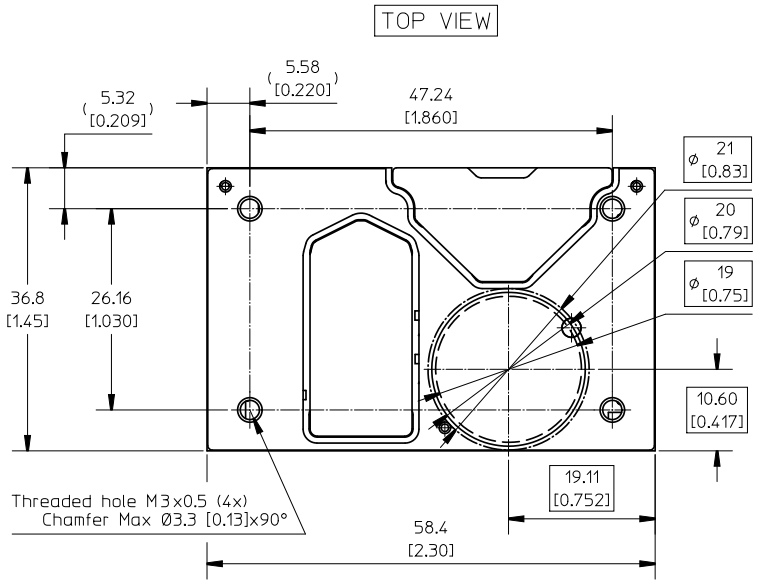

	Lead length	Digital pin insert length
Standard	5.33 [0.210]	4.83 [0.190]
LA	3.69 [0.145]	3.19 [0.126]
LB	4.57 [0.180]	4.01 [0.158]

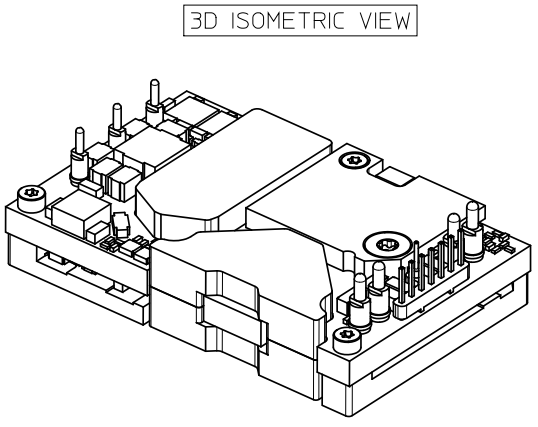

NOTES:
BASEPLATE INTERFACE
Material: Aluminium
For screw attachment apply mounting torque of max 0.44 Nm [3.9 lbf in.]
M3 screw must not protrude more than 2.7 mm [0.106 in.] into the baseplate.

WEIGHT
Typical: 85 g

All dimensions are in mm [inch].
Tolerance unless specified:
x.x mm ±0.50 mm. [x.xx in. ±0.02 in.]
x.xx mm ±0.25 mm. [x.xxx in. ±0.010 in.]

3D MODELS
3D .stp models are available on request.

All component placements, whether shown as physical components or symbolical outline, are for reference only and are subject to change throughout the product's life cycle unless explicitly described and dimensioned in this drawing.

Footprint and Pin positions valid for all versions

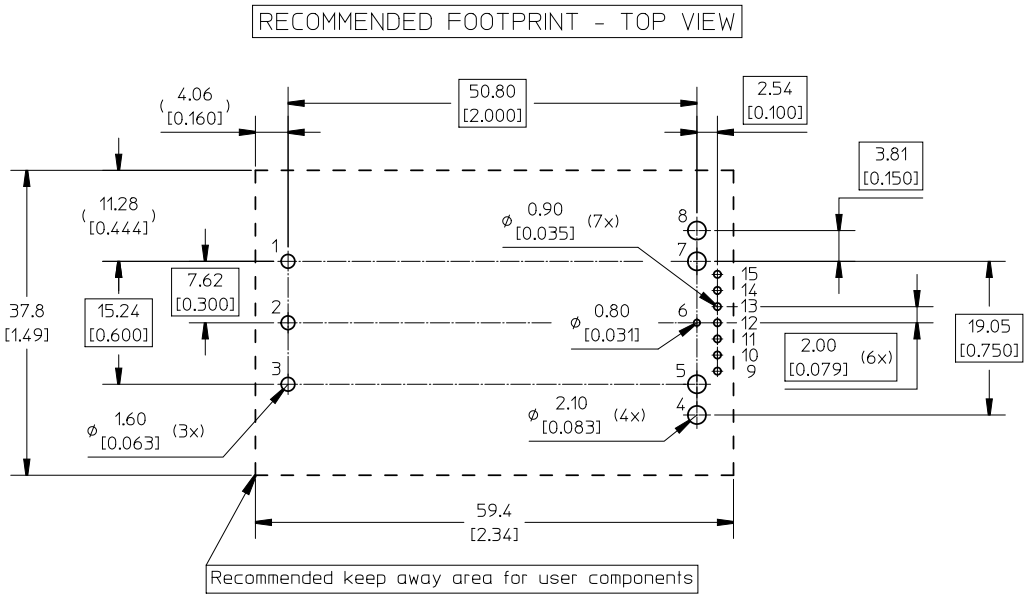

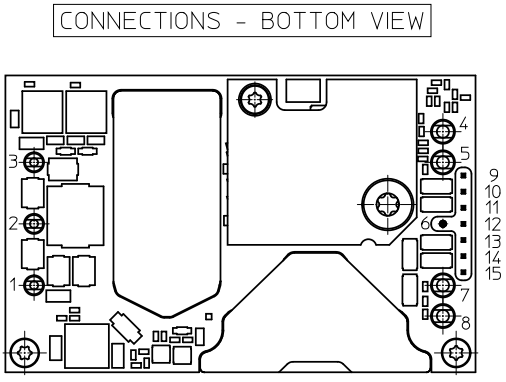

PIN SPECIFICATIONS:

Pin 1-5, 7-8 Material: Copper alloy
Plating: Min Au 0.1 µm over Ni 1-3 µm

Pin 6, 9-15 Material: Brass
Plating: Min Au 0.1 µm over Ni 1-3 µm

© Flex

Soldering Information – Hole Mount through Pin in Paste Assembly

The pin in paste mount product is intended for forced convection or vapor phase reflow soldering in SnPb and Pb-free processes.

Reflow soldering is not preferred for through-hole mounted power modules due to challenges resulting in reduced reliability. High temperature reflow soldering causing IMC layer thickness increase resulting in shorten solder joint lifetime. To avoid component or solder failure a module peak temperature higher than 245 degrees and above 217 degrees more than 90 seconds is not recommended. To prevent re-melt of module internal solder joints shielding cap is required during reflow process.

A no-clean flux is recommended to avoid entrapment of cleaning fluids in cavities inside the product or between the product and the host board, since cleaning residues may affect long time reliability and isolation voltage.

General reflow process specifications		SnPb eutectic	Pb-free
Average ramp-up ($T_{PRODUCT}$)		3°C/s max	3°C/s max
Typical solder melting (liquidus) temperature	T_L	183°C	221°C
Minimum reflow time above T_L	T_{PIN}	60 s	60 s
Minimum pin temperature	T_{PIN}	210°C	235°C
Peak product temperature	$T_{PRODUCT}$	225°C	245°C
Average ramp-down ($T_{PRODUCT}$)		6°C/s max	6°C/s max
Maximum time 25°C to peak		6 minutes	8 minutes

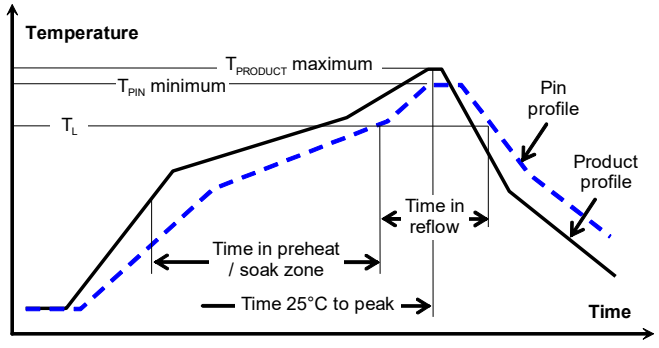

Thermocoupler Attachment

$T_{PRODUCT}$ is measured on the base plate top side, since this will likely be the warmest part of the product during the reflow process.
T_{PIN} temperature is measured on the power module pins solder joints at customer board.

Product reflow classification

The product has been tested for the following

Pb-free solder classification

For Pb-free solder processes, the product is qualified for MSL 3 according to IPC/JEDEC standard J-STD-020C.

Product reflow processes

SnPb solder processes

For SnPb solder processes, a pin temperature (T_{PIN}) in excess of the solder melting temperature, (T_L, 183°C for Sn63Pb37) for more than 60 seconds and a peak temperature of 220°C is recommended to ensure a reliable solder joint.

For dry packed products only: depending on the type of solder paste and flux system used on the host board, up to a recommended maximum temperature of 245°C could be used, if the products are kept in a controlled environment (dry pack handling and storage) prior to assembly.

Lead-free (Pb-free) solder processes

For Pb-free solder processes, a pin temperature (T_{PIN}) in excess of the solder melting temperature (T_L, 217 to 221°C for SnAgCu solder alloys) for more than 60 seconds and a peak temperature of 245°C on all solder joints is recommended to ensure a reliable solder joint.

Dry Pack Information

Products intended for Pb-free reflow soldering processes are delivered in standard moisture barrier bags according to IPC/JEDEC standard J-STD-033 (Handling, packing, shipping and use of moisture/reflow sensitivity surface mount devices).

Using products in high temperature Pb-free soldering processes requires dry pack storage and handling. In case the products have been stored in an uncontrolled environment and no longer can be considered dry, floor life according to MSL 3, the modules must be baked according to J-STD-033.

© Flex

Soldering Information - Hole Mounting

The hole mounted product is intended for plated through hole mounting by wave or manual soldering. The pin temperature is specified to maximum to 270°C for maximum 10 seconds.

A maximum preheat rate of 4°C/s and maximum preheat temperature of 150°C is suggested. When soldering by hand, care should be taken to avoid direct contact between the hot soldering iron tip and the pins for more than a few seconds in order to prevent overheating.

A no-clean flux is recommended to avoid entrapment of cleaning fluids in cavities inside the product or between the product and the host board. The cleaning residues may affect long time reliability and isolation voltage.

Delivery Package Information

The products are delivered in antistatic Foam trays and in antistatic PPE trays (H option in PN, hard tray).

© Flex

Tray Specifications – Through hole version, BP versions and Integrated Heat sink without dry pack	
Material	PE Foam
Surface resistance	10^5 < Ohm/square < 10^{11}
Bakeability	The trays are not bakeable
Tray capacity	20 converters/tray
Box capacity	60 Base Plate products (3 full trays/box) 40 Integrated Heat Sink products (2 full trays/box)
Weight	48 g empty tray, 1790 g full tray Open deck BP 48 g empty tray, 2077 g full tray Int Heat sink 48 g empty tray, 1754 g full tray Thin BP

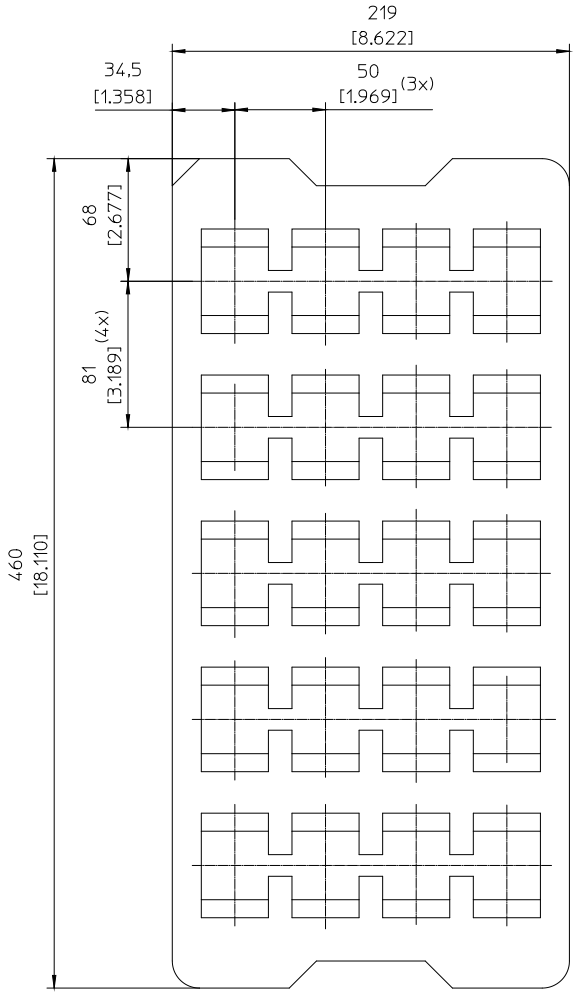

Example PE Foam tray

Tray Specifications –base plate version (dry pack, pick & place) (“H” option)	
Material	Antistatic PPE
Surface resistance	10^5 < Ohm/square < 10^{11}
Bakeability	The trays can be baked at maximum 125°C for 48 hours
Tray capacity	14 converters/tray
Box capacity	42 products (3 full trays/box)
Weight	214 g empty tray, 1432 g full tray Open deck BP 214 g empty tray, 1408 g full tray Thin BP

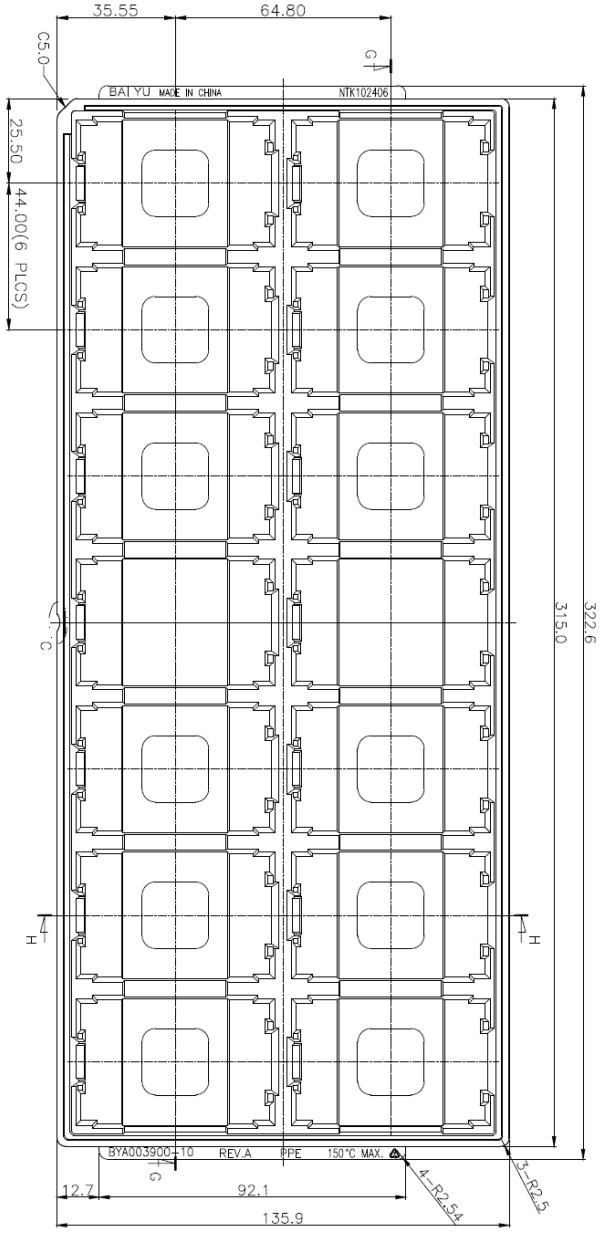

Hard tray (14 pcs)

© Flex

Product Qualification Specification

Characteristics			
External visual inspection	IPC-A-610		
Temperature shock test (Temperature cycling)	IEC 60068-2-14 Na	Temperature range Number of cycles Dwell/transfer time	-40 to 125°C 700 15 min/0-1 min
Cold (in operation)	IEC 60068-2-1 Ad	Temperature T_A Duration	-45°C 72 h
Damp heat	IEC 60068-2-67 Cy	Temperature Humidity Duration	85°C 85 % RH 1000 hours
Dry heat	IEC 60068-2-2 Bd	Temperature Duration	125°C 1000 h
Electrostatic discharge susceptibility	IEC 61340-3-1, JESD 22-A114 IEC 61340-3-2, JESD 22-A115	Human body model (HBM) Machine Model (MM)	Class 2, 2000 V Class 3, 200 V
Immersion in cleaning solvents	IEC 60068-2-45 XA, method 2	Water	55°C
Mechanical shock	IEC 60068-2-27 Ea	Peak acceleration Duration	100 g 6 ms
Moisture reflow sensitivity [1]	J-STD-020E	Level 1 (SnPb-eutectic) Level 3 (Pb Free)	225°C 245°C
Operational Life test Rapid Temp.	MIL-STD-202G, method 108A	Duration	800 h
Resistance to soldering heat [2]	IEC 60068-2-20 Tb, method 1A	Solder temperature Duration	270°C 10-13 s
Robustness of terminations	IEC 60068-2-21 Test Ua1 IEC 60068-2-21 Test Ue1	Through hole mount products Surface mount products	All leads All leads
Solderability	IEC 60068-2-20 test Ta	Preconditioning Temperature, Pb-free	Steam ageing 245°C
Vibration, broad band random	IEC 60068-2-64 Fh, method 1	Frequency Spectral density Duration	10 to 500 Hz 0.07 g^2/Hz 10 min in each direction

Notes
[1] Only for products intended for reflow soldering (surface mount products & pin-in paste[3] products)
[2] Only for products intended for wave soldering (plated through hole products)

PMBus Command Appendix

This appendix contains a detailed reference of the PMBus commands supported by the product.

Data Formats
The products make use of a few standardized numerical formats, along with custom data formats. A detailed walkthrough of the above formats is provided in AN304, as well as in sections 7 and 8 of the PMBus Specification Part II. The custom data formats vary depending on the command, and are detailed in the command description.

Standard Commands
The functionality of commands with code 0x00 to 0xCF is usually based on the corresponding command specification provided in the PMBus Standard Specification Part II (see Power System Management Bus Protocol Documents below). However there might be different interpretations of the PMBus Standard Specification or only parts of the Standard Specification applied, thus the detailed command description below should always be consulted.

Forum Websites
The System Management Interface Forum (SMIF)
http://www.powersig.org/
The System Management Interface Forum (SMIF) supports the rapid advancement of an efficient and compatible technology base that promotes power management and systems technology implementations. The SMIF provides a membership path for any company or individual to be active participants in any or all of the various working groups established by the implementer forums.

Power Management Bus Implementers Forum
(PMBUS-IF)
http://pmbus.org/
The PMBus-IF supports the advancement and early adoption of the PMBus protocol for power management. This website offers recent PMBus specification documents, PMBus articles, as well as upcoming PMBus presentations and seminars, PMBus Document Review Board (DRB) meeting notes, and other PMBus related news.

PMBus – Power System Management Bus Protocol Documents
These specification documents may be obtained from the PMBus-IF website described above. These are required reading for complete understanding of the PMBus implementation. This appendix will not re-address all of the details contained within the two PMBus Specification documents.

Specification Part I – General Requirements Transport And Electrical Interface
Includes the general requirements, defines the transport and electrical interface and timing requirements of hard wired signals.

Specification Part II – Command Language
Describes the operation of commands, data formats, fault management and defines the command language used with the PMBus.

SMBus – System Management Bus Documents
System Management Bus Specification, Version 2.0, August 3, 2000
This specification specifies the version of the SMBus on which Revision 1.2 of the PMBus Specification is based. This specification is freely available from the System Management Interface Forum Web site at:
http://www.smbus.org/specs/

© Flex

PMBus Command Summary and Factory Default Values of Standard Configuration

The factory default values provided in the table below are valid for the Standard configuration. Factory default values for other configurations can be found using the Flex Power Designer tool.

Code	Name	Data Format	Factory Default Value Standard Configuration BMR 491 XXXX/856 C	
0x01	OPERATION	R/W Byte	0x84	
0x02	ON_OFF_CONFIG	R/W Byte	0x18	
0x03	CLEAR_FAULTS	Send Byte		
0x10	WRITE_PROTECT	R/W Byte		
0x11	STORE_DEFAULT_ALL	Send Byte		
0x12	RESTORE_DEFAULT_ALL	Send Byte		
0x15	STORE_USER_ALL	Send Byte		
0x16	RESTORE_USER_ALL	Send Byte		
0x19	CAPABILITY	Read Byte		
0x20	VOUT_MODE	Read Byte	0x15	
0x21	VOUT_COMMAND	R/W Word	0x60CD	12.1 V
0x22	VOUT_TRIM	R/W Word	0x0000	0.0 V
0x23	VOUT_CAL_OFFSET	R/W Word	Unit Specific	
0x24	VOUT_MAX	R/W Word	0x699A	13.2 V
0x25	VOUT_MARGIN_HIGH	R/W Word	0x6800	13.0 V
0x26	VOUT_MARGIN_LOW	R/W Word	0x5733	10.9 V
0x27	VOUT_TRANSITION_RATE	R/W Word	0x9B02	0.1 V/ms
0x28	VOUT_DROOP	R/W Word	0xE800	0.0 mV/A
0x29	VOUT_SCALE_LOOP	R/W Word	Unit Specific	
0x2A	VOUT_SCALE_MONITOR	R/W Word	Unit Specific	
0x32	MAX_DUTY	R/W Word	0xEB10	98.0 %
0x33	FREQUENCY_SWITCH	R/W Word	0x00B4	180.0 kHz
0x35	VIN_ON	R/W Word	0x002F	47.0 V
0x36	VIN_OFF	R/W Word	0x002B	43.0 V
0x37	INTERLEAVE	R/W Word	0x0021	
0x39	IOUT_CAL_OFFSET	Read Word	Unit Specific	
0x40	VOUT_OV_FAULT_LIMIT	R/W Word	0x6A66	13.3 V
0x41	VOUT_OV_FAULT_RESPONSE	R/W Byte	0xC0	
0x42	VOUT_OV_WARN_LIMIT	R/W Word	0x68CD	13.1 V
0x43	VOUT_UV_WARN_LIMIT	R/W Word	0x0000	0.0 V
0x44	VOUT_UV_FAULT_LIMIT	R/W Word	0x0000	0.0 V
0x45	VOUT_UV_FAULT_RESPONSE	R/W Byte	0x00	
0x46	IOUT_OC_FAULT_LIMIT	R/W Word	0x00EB	235.0 A
0x47	IOUT_OC_FAULT_RESPONSE	R/W Byte	0x7B	
0x48	IOUT_OC_LV_FAULT_LIMIT	R/W Word	0x4000	8.0 V
0x4A	IOUT_OC_WARN_LIMIT	R/W Word	0x00E6	230.0 A
0x4F	OT_FAULT_LIMIT	R/W Word	0x0073	115.0 °C
0x50	OT_FAULT_RESPONSE	R/W Byte	0xC0	
0x51	OT_WARN_LIMIT	R/W Word	0x005A	90.0 °C
0x52	UT_WARN_LIMIT	R/W Word	0x07D8	-40.0 °C
0x53	UT_FAULT_LIMIT	R/W Word	0x07CE	-50.0 °C
0x54	UT_FAULT_RESPONSE	R/W Byte	0x00	
0x55	VIN_OV_FAULT_LIMIT	R/W Word	0x0040	64.0 V
0x56	VIN_OV_FAULT_RESPONSE	R/W Byte	0xC0	
0x57	VIN_OV_WARN_LIMIT	R/W Word	0x003E	62.0 V
0x58	VIN_UV_WARN_LIMIT	R/W Word	0xE978	47.0 V
0x59	VIN_UV_FAULT_LIMIT	R/W Word	0x0000	0.0 V
0x5A	VIN_UV_FAULT_RESPONSE	R/W Byte	0x00	
0x5E	POWER_GOOD_ON	R/W Word	0x4000	8.0 V
0x5F	POWER_GOOD_OFF	R/W Word	0x2800	5.0 V
0x60	TON_DELAY	R/W Word	0x0000	
0x61	TON_RISE	R/W Word	0x000A	
0x62	TON_MAX_FAULT_LIMIT	R/W Word	0x000F	

© Flex

Code	Name	Data Format	Factory Default Value Standard Configuration BMR 491 XXXX/856 C	
0x63	TON_MAX_FAULT_RESPONSE	R/W Byte	0x00	
0x64	TOFF_DELAY	R/W Word	0x0005	
0x65	TOFF_FALL	R/W Word	0x000A	
0x66	TOFF_MAX_WARN_LIMIT	R/W Word	0x000F	
0x78	STATUS_BYTE	Read Byte		
0x79	STATUS_WORD	Read Word		
0x7A	STATUS_VOUT	Read Byte		
0x7B	STATUS_IOUT	Read Byte		
0x7C	STATUS_INPUT	Read Byte		
0x7D	STATUS_TEMPERATURE	Read Byte		
0x7E	STATUS_CML	Read Byte		
0x88	READ_VIN	Read Word		
0x8B	READ_VOUT	Read Word		
0x8C	READ_IOUT	Read Word		
0x8D	READ_TEMPERATURE_1	Read Word		
0x8E	READ_TEMPERATURE_2	Read Word		
0x94	READ_DUTY_CYCLE	Read Word		
0x95	READ_FREQUENCY	Read Word		
0x98	PMBUS_REVISION	Read Byte		
0x99	MFR_ID	R/W Block12	Unit Specific	
0x9A	MFR_MODEL	R/W Block20	Unit Specific	
0x9B	MFR_REVISION	R/W Block12	Unit Specific	
0x9C	MFR_LOCATION	R/W Block12	Unit Specific	
0x9D	MFR_DATE	R/W Block12	Unit Specific	
0x9E	MFR_SERIAL	R/W Block20	Unit Specific	
0xB0	USER_DATA_00	R/W Block16	Unit Specific	
0xC4	MFR_VIN_OV_WARN_RESPONSE	R/W Byte	0x00	
0xC5	MFR_CONFIG_UNUSED_PINS	R/W Word	0x02F6	
0xC6	MFR_RC_LEVEL	R/W Byte	0xC8	
0xC7	MFR_KS_PRETRIG	R/W Byte	0x89	
0xC8	MFR_FAST_VIN_OFF_OFFSET	R/W Byte	0x20	
0xD0	MFR_PGOOD_POLARITY	R/W Byte	0x00	
0xD1	MFR_FAST_OCP_CFG	R/W Word	0x02F2	114 level, 2 samples
0xD2	MFR_RESPONSE_UNIT_CFG	R/W Byte	0x55	
0xD3	MFR_VIN_SCALE_MONITOR	Read Block4	Unit Specific	
0xD4	MFR_PREBIAS_DVDT_CFG	R/W Block8	0x1E001E00F0040401	
0xD5	MFR_FILTER_SELECT	R/W Byte	0x00	
0xD7	MFR_READ_EVENT	Read Block23		
0xD8	MFR_TEMP_COMPENSATION	Read Block8	0x0095900085800 7F	
0xD9	MFR_SET_ROM_MODE	Write Block4		
0xDA	MFR_ISHARE_THRESHOLD	R/W Block8	0x0000000000000000	
0xDB	MFR_EVENT_INDEX	R/W Byte		
0xDC	MFR_SELECT_TEMPERATURE_SENSOR	R/W Byte	0x00	
0xDD	MFR_VIN_OFFSET	Read Block4	Unit Specific	
0xDE	MFR_VOUT_OFFSET_MONITOR	Read Word	Unit Specific	
0xE0	MFR_SPECIAL_OPTIONS	R/W Byte	0x40	
0xE1	MFR_TEMP_OFFSET_INT	Read Word	Unit Specific	
0xE2	MFR_REMOTE_TEMP_CAL	Read Block4	Unit Specific	
0xE3	MFR_REMOTE_CTRL	R/W Byte	0x17	
0xE6	MFR_VFF_PARAMS	R/W Block4	0x0E010800	
0xE7	MFR_TEMP_COEFF	Read Block6	0x00FF00FFF600	
0xE8	MFR_FILTER_COEFF	R/W Block27	0x01B60267FF0000000055035503000000005000460000005802401F	
0xE9	MFR_FILTER_NLR_GAIN	R/W Block16	0x0900000000000000000000000000FF00	
0xEB	MFR_MIN_DUTY	R/W Word	0x4C46	70 ns, 76 ns
0xEC	MFR_ACTIVE_CLAMP	Read Word	0x8000	0 x4 ns, 0 x4 ns

© Flex

Code	Name	Data Format	Factory Default Value Standard Configuration BMR 491 XXXX/856 C	
0xEE	MFR_OFFSET_ADDRESS	R/W Byte	0x60	96 n + SA0
0xEF	MFR_DBV_CONFIG	R/W Block6	0x7A76283E3A20	
0xF0	MFR_DEBUG_BUFF	R/W Block8		
0xF1	MFR_SETUP_PASSWORD	R/W Block12		
0xF2	MFR_DISABLE_SECURITY_ONCE	R/W Block6		
0xF4	MFR_SECURITY_BIT_MASK	Read Block32		
0xF5	MFR_TRANSFORMER_TURN	Read Byte	0x41	
0xF6	MFR_OSC_TRIM	Read Byte	0x00	
0xF7	MFR_DLC_CONFIG	R/W Block8	0x0000000000000000	
0xF8	MFR_ILIM_SOFTSTART	R/W Byte	0x14	20 %
0xF9	MFR_MULTI_PIN_CONFIG	R/W Word	0x0000	
0xFC	MFR_ADDED_DROOP_DURING_RAMP	R/W Word	0xE800	0.0 mV/A
0xFD	MFR_FIRMWARE_DATA	Read Block20		
0xFE	MFR_RESTART	Write Block4		

© Flex

PMBus Command Details

OPERATION (0x01)
Description: Sets the desired PMBus enable and margin operations.

Bit	Function	Description	Value	Function	Description
7:6	Enable	Make the device enable or disable.	00	Immediate Off	Disable Immediately without sequencing.
			01	Soft Off	Disable "Softly" with sequencing.
			10	Enable	Enable device to the desired margin state.
5:4	Margin	Select between margin high/low states or nominal output.	00	Nominal	Operate at nominal output voltage.
			01	Margin Low	Operate at margin low voltage set in VOUT_MARGIN_LOW.
			10	Margin High	Operate at margin high voltage set in VOUT_MARGIN_HIGH.
3:2	Act on Fault	Set 10b to act on fault or set to 01b to ignore fault.	01	Ignore Faults	Ignore Faults when in a margined state. The device will ignore appropriate overvoltage/undervoltage warnings and faults and respond as programmed by the warning limit or fault response command.
			10	Act on Faults	Act on Faults when in a margined state. The device will handle appropriate overvoltage/undervoltage warnings and faults and respond as programmed by the warning limit or fault response command.

ON_OFF_CONFIG (0x02)
Description: Configures how the device is controlled by the CONTROL pin and the PMBus.

Bit	Function	Description	Value	Function	Description
4	Powerup Operation	Sets the default to either operate any time power is present or for the on/off to be controlled by CONTROL pin and serial bus commands.	0	Enable Always	Unit powers up any time power is present regardless of state of the CONTROL pin, taking the RC configuration into account, see command 0xE3
			1	Enable pin or PMBus	Unit does not power up until commanded by the CONTROL pin and OPERATION command.
3	PMBus Enable Mode	Controls how the unit responds to commands received via the serial bus.	0	Ignore PMBus	Unit ignores the on/off portion of the OPERATION command from serial bus.
			1	Use PMBus	To start, the unit requires that the on/off portion of the OPERATION command is instructing the unit to run.
2	Enable Pin Mode	Controls how the unit responds to the CONTROL pin.	0	Ignore pin	Unit ignores the CONTROL/Enable pin.
			1	Use pin	Unit requires the CONTROL pin to be asserted to start the unit.
1	Enable Pin Polarity	Polarity of the CONTROL pin.	0	Active Low	Enable pin will cause device to enable when driven low.
			1	Active High	Enable pin will cause device to enable when driven high.

© Flex

Bit	Function	Description	Value	Function	Description
0	Disable Action	CONTROL pin action when commanding the unit to turn off.	0	Soft Off	Use the programmed turn off delay and fall time.
			1	Imm. Off	Turn off the output and stop transferring energy to the output as fast as possible. The device's product literature shall specify whether or not the device sinks current to decrease the output voltage fall time.

CLEAR_FAULTS (0x03)
Description: Clears all fault status bits

WRITE_PROTECT (0x10)
Description: The WRITE_PROTECT command is used to control writing to the PMBus device. The intent of this command is to provide protection against accidental changes. This command is not intended to provide protection against deliberate or malicious changes to a device's configuration or operation.

Bit	Description	Value	Function	Description
7:0	All supported commands may have their parameters read, regardless of the WRITE_PROTECT settings.	0x80	Disable all writes	Disable all writes except to the WRITE_PROTECT command.
		0x40	Enable operation	Disable all writes except to the WRITE_PROTECT, OPERATION and PAGE commands.
		0x20	Enable control and Vout commands	Disable all writes except to the WRITE_PROTECT, OPERATION, PAGE, ON_OFF_CONFIG and VOUT_COMMAND commands.
		0x00	Enable all commands	Enable writes to all commands.

STORE_DEFAULT_ALL (0x11)
Description: Commands the device to store its configuration into the Default Store.

RESTORE_DEFAULT_ALL (0x12)
Description: Commands the device to restore its configuration from the Default Store.

STORE_USER_ALL (0x15)
Description: Stores, at the USER level, all PMBus values that were changed since the last restore command.

RESTORE_USER_ALL (0x16)
Description: Restores PMBus settings that were stored using STORE_USER_ALL. This command is automatically performed at power up.

CAPABILITY (0x19)
Description: This command provides a way for a host system to determine some key capabilities of a PMBus device.

Bit	Function	Description	Value	Function	Description
7	Packet Error Checking	Packet error checking	0	Not supported	Packet Error Checking not supported.
			1	Supported	Packet Error Checking is supported.
6:5	Maximum Bus Speed	Maximum bus speed	00	100kHz	Maximum supported bus speed is 100 kHz.
			01	400kHz	Maximum supported bus speed is 400 kHz.
			10	1MHz	Maximum supported bus speed is 1MHz

© Flex

Bit	Function	Description	Value	Function	Description
			11	reserved	
4	SMBALERT #	SMBALERT	0	No SMBALERT	The device does not have a SMBALERT# pin and does not support the SMBus Alert Response protocol.
			1	Have SMBALERT	The device does have a SMBALERT# pin and does support the SMBus Alert Response protocol.
3	Numeric format	Numeric format	0		Numeric data is in LINEAR11, ULINEAR16, SLINEAR16, or DIRECT format
			1		Numeric data is in IEEE Half Precision Floating Point Format
2	AVSBus Support	AVSBus Support	0		AVSBus Not Supported
			1		AVSBus Supported
1:0	Reserved		X		Reserved

VOUT_MODE (0x20)
Description: Controls how future VOUT-related commands parameters will be interpreted.

Bit	Function	Description	Format
4:0		Five bit two's complement EXPONENT for the MANTISSA delivered as the data bytes for VOUT_COMMAND in VOUT_LINEAR Mode, five bit VID code identifier per in VID Mode or always set to 00000b in Direct Mode.	Integer Signed

Bit	Function	Description	Value	Function	Description
7:5		Set to 000b to select VOUT_LINEAR Mode (Five bit two's complement exponenet for the MANTISSA delivered as the data bytes for an output voltage related command), set to 001b to select VID Mode (Five bit VID code identifier per) or set to 010b to select Direct Mode (Always set to 00000b).	000	Linear	Linear Mode Format.
			001	VID	VID Mode.
			010	Direct	Direct Mode.

VOUT_COMMAND (0x21)
Description: Commands the device to transition to a new output voltage.

Bit	Description	Format	Unit
15:0	Sets the nominal value of the output voltage.	Vout Mode Unsigned	V

VOUT_TRIM (0x22)
Description: Configures a fixed offset to be applied to the output voltage when enabled.

Bit	Description	Format	Unit
15:0	Sets VOUT trim value. The two bytes are formatted as a two's complement binary mantissa, used in conjunction with the exponent set in VOUT_MODE.	Vout Mode Signed	V

VOUT_CAL_OFFSET (0x23)
Description: Vout calibration value. It is a signed number in Vout linear mode. The setting will be applied output voltage.

Bit	Description	Format	Unit
15:0	Vout calibration value. It is a signed number in Vout linear mode. The setting will be applied output voltage.	Vout Mode Signed	V

© Flex

VOUT_MAX (0x24)
Description: Configures the maximum allowed output voltage.

Bit	Description	Format	Unit
15:0	Sets the maximum possible value setting of VOUT. The maximum VOUT_MAX setting is 110% of the pin-strap setting.	Vout Mode Unsigned	V

VOUT_MARGIN_HIGH (0x25)
Description: Configures the target for margin-up commands.

Bit	Description	Format	Unit
15:0	Sets the value of the VOUT during a margin high.	Vout Mode Unsigned	V

VOUT_MARGIN_LOW (0x26)
Description: Configures the target for margin-down commands.

Bit	Description	Format	Unit
15:0	Sets the value of the VOUT during a margin low.	Vout Mode Unsigned	V

VOUT_TRANSITION_RATE (0x27)
Description: Configures the transition time for margins and VCOMMAND output changes.

Bit	Description	Format	Unit
15:0	Sets the transition rate during margin or other change of VOUT.	Linear	V/ms

VOUT_DROOP (0x28)
Description: Configures the Isense voltage to load current ratio.

Bit	Description	Format	Unit
15:0	Sets the effective load line (V/I slope) for the rail in which the device is used.	Linear	mV/A

VOUT_SCALE_LOOP (0x29)
Description: Gain of Vout EADC sense.

Bit	Description	Format
15:0	Gain of Vout EADC sense.	Direct

VOUT_SCALE_MONITOR (0x2A)
Description: Normally there is a voltage divider in the voltage sense circuit. The scale factor is represented by VOUT_SCALE_MONITOR.

Bit	Description	Format
15:0	Normally there is a voltage divider in the voltage sense circuit. The scale factor is represented by VOUT_SCALE_MONITOR.	Direct

MAX_DUTY (0x32)
Description: Configures the maximum allowed duty-cycle.

Bit	Description	Format	Unit
15:0	Sets the maximum allowable duty cycle of the switching frequency.	Linear	%

FREQUENCY_SWITCH (0x33)
Description: Controls the switching frequency in 1kHz steps.

Bit	Description	Format	Unit
15:0	Sets the switching frequency.	Linear	kHz

© Flex

VIN_ON (0x35)
Description: The VIN_ON command sets the value of the input voltage, in volts, at which the unit should start power conversion.

Bit	Description	Format	Unit
15:0	Sets the VIN ON threshold.	Linear	V

VIN_OFF (0x36)
Description: The VIN_OFF command sets the value of the input voltage, in volts, at which the unit, once operation has started, should stop power conversion.

Bit	Description	Format	Unit
15:0	Sets the VIN OFF threshold.	Linear	V

INTERLEAVE (0x37)
Description: Configures the phase offset with respect to a common SYNC clock. When multiple product share a common DC input supply, spreading of the switching phases between the products can be utilized. This reduces the input capacitance requirements and efficency losses, since the peak current drawn from the input supply is effectively spread out over the whole switch period. If two or more units have their outputs connected in parallell, interleaving will reduce ripple currents. This requires that the products are synchronized using the SYNC pin.

Bit	Function	Description	Format
11:8	Group ID Number	Value 0-15. Sets an ID number to a group of interleaved rails.	Integer Unsigned
7:4	Number of Rails	Value 0-15. Sets the number of units in the group, including the SYNC OUT product.	Integer Unsigned
3:0	Rail Position	Value 0-15. Sets the interleave order for this unit. The product configured to SYNC OUT shall be assigned to number 0	Integer Unsigned

IOUT_CAL_OFFSET (0x39)
Description: Sets the current-sense offset.

Bit	Description	Format	Unit
15:0	Sets an offset to IOUT readings. Use to compensate for delayed measurements of current ramp.	Linear	A

VOUT_OV_FAULT_LIMIT (0x40)
Description: Output over voltage fault limit.

Bit	Description	Format	Unit
15:0	Output over voltage fault limit.	Vout Mode Unsigned	V

VOUT_OV_FAULT_RESPONSE (0x41)
Description: Output over voltage fault response.

Bit	Function	Description	Value	Function	Description
7:6	Response		00	Ignore Fault	The PMBus device continues operation without interruption.
			01	Perform Retries while Operating	The PMBus device continues operation for the delay time specified by bits [2:0] and the delay time unit specified for that particular fault. If the fault condition is still present at the end of the delay time, the unit responds as programmed in the Retry Setting (bits [5:3]).

© Flex

Bit	Function	Description	Value	Function	Description
		Describes the device interruption operation. 00b - The PMBus device continues operation without interruption. 01b - The PMBus device continues operation for the delay time specified by bits [2:0] and the delay time unit specified for that particular fault. If the fault condition is still present at the end of the delay time, the unit responds as programmed in the Retry Setting (bits [5:3]). 10b - The device shuts down (disables the output) and responds according to the Retry Setting in bits [5:3]. 11b - The device's output is disabled while the fault is present. Operation resumes and the output is enabled when the fault condition no longer exists.	10	Disable and retry	The device shuts down (disables the output) and responds according to the retry setting in bits [5:3].
			11	Disable until Fault Cleared	A fault can cleared in several ways: The bit is individually cleared, The device receives a CLEAR_FAULTS command, a RESET signal (if one exists) is asserted, the output is commanded through the CTRL pin, the OPERATION command, or the combined action of the CTRL pin and OPERATION command, to turn off and then to turn back on, or Bias power is removed from the PMBus device.
5:3	Retries	The device attempts to restart the number of times set by these bits. 000b means the device does not attempt a restart. 111b means the device attempts restarting continuously.	000	Do Not Retry	A zero value for the Retry Setting means that the unit does not attempt to restart. The output remains disabled until the fault is cleared (Section 10.7).
			001	Retry Once	The PMBus device attempts to restart 1 time. If the device fails to restart, it disables the output and remains off until the fault is cleared as described in Section 10.7. The time between the start of each attempt to restart is set by the value in bits [2:] along with the delay time unit specified for that particular fault.
			010	Retry Twice	The PMBus device attempts to restart 2 times. If the device fails to restart, it disables the output and remains off until the fault is cleared as described in Section 10.7. The time between the start of each attempt to restart is set by the value in bits [2:] along with the delay time unit specified for that particular fault.
			011	Retry 3 times	The PMBus device attempts to restart 3 times. If the device fails to restart, it disables the output and remains off until the fault is cleared as described in Section 10.7. The time between the start of each attempt to restart is set by the value in bits [2:] along with the delay time unit specified for that particular fault.

© Flex

Bit	Function	Description	Value	Function	Description
			100	Retry 4 times	The PMBus device attempts to restart 4 times. If the device fails to restart, it disables the output and remains off until the fault is cleared as described in Section 10.7. The time between the start of each attempt to restart is set by the value in bits [2:] along with the delay time unit specified for that particular fault.
			101	Retry 5 times	The PMBus device attempts to restart 5 times. If the device fails to restart, it disables the output and remains off until the fault is cleared as described in Section 10.7. The time between the start of each attempt to restart is set by the value in bits [2:] along with the delay time unit specified for that particular fault.
			110	Retry 6 times	The PMBus device attempts to restart 6 times. If the device fails to restart, it disables the output and remains off until the fault is cleared as described in Section 10.7. The time between the start of each attempt to restart is set by the value in bits [2:] along with the delay time unit specified for that particular fault.
			111	Retry Continuously	The PMBus device attempts to restart continuously, without limitation, until it is commanded OFF (by the CONTROL pin or OPERATION command or both), bias power is removed, or another fault condition causes the unit to shut down.
2:0	Retry Time and Delay Time	Number of delay time units. Used for either the amount of time the device is to continue operating after a fault is detected or for the amount of time between attempts to restart. The time unit is set in register 0xD2.	0	1	
			1	2	
			2	4	
			3	8	
			4	16	
			5	32	
			6	64	
			7	128	

VOUT_OV_WARN_LIMIT (0x42)
Description: Output over voltage warning limit.

Bit	Description	Format	Unit
15:0	Output over voltage warning limit.	Vout Mode Unsigned	V

VOUT_UV_WARN_LIMIT (0x43)
Description: Output under voltage warning limit.

Bit	Description	Format	Unit
15:0	Output under voltage warning limit.	Vout Mode Unsigned	V

© Flex

VOUT_UV_FAULT_LIMIT (0x44)
Description: Output under voltage fault limit.

Bit	Description	Format	Unit
15:0	Output under voltage fault limit.	Vout Mode Unsigned	V

VOUT_UV_FAULT_RESPONSE (0x45)
Description: Output under voltage fault response.

Bit	Function	Description	Value	Function	Description
7:6	Response	Describes the device interruption operation. 00b - The PMBus device continues operation without interruption. 01b - The PMBus device continues operation for the delay time specified by bits [2:0] and the delay time unit specified for that particular fault. If the fault condition is still present at the end of the delay time, the unit responds as programmed in the Retry Setting (bits [5:3]). 10b - The device shuts down (disables the output) and responds according to the Retry Setting in bits [5:3]. 11b - The device's output is disabled while the fault is present. Operation resumes and the output is enabled when the fault condition no longer exists.	00	Ignore Fault	The PMBus device continues operation without interruption.
			01	Perform Retries while Operating	The PMBus device continues operation for the delay time specified by bits [2:0] and the delay time unit specified for that particular fault. If the fault condition is still present at the end of the delay time, the unit responds as programmed in the Retry Setting (bits [5:3]).
			10	Disable and retry	The device shuts down (disables the output) and responds according to the retry setting in bits [5:3].
			11	Disable until Fault Cleared	A fault can cleared in several ways: The bit is individually cleared, The device receives a CLEAR_FAULTS command, a RESET signal (if one exists) is asserted, the output is commanded through the CTRL pin, the OPERATION command, or the combined action of the CTRL pin and OPERATION command, to turn off and then to turn back on, or Bias power is removed from the PMBus device.
5:3	Retries	The device attempts to restart the number of times set by these bits. 000b means the device does not attempt a restart. 111b means the device attempts restarting continuously.	000	Do Not Retry	A zero value for the Retry Setting means that the unit does not attempt to restart. The output remains disabled until the fault is cleared (Section 10.7).
			001	Retry Once	The PMBus device attempts to restart 1 time. If the device fails to restart, it disables the output and remains off until the fault is cleared as described in Section 10.7. The time between the start of each attempt to restart is set by the value in bits [2:] along with the delay time unit specified for that particular fault.

© Flex

Bit	Function	Description	Value	Function	Description
			010	Retry Twice	The PMBus device attempts to restart 2 times. If the device fails to restart, it disables the output and remains off until the fault is cleared as described in Section 10.7. The time between the start of each attempt to restart is set by the value in bits [2:] along with the delay time unit specified for that particular fault.
			011	Retry 3 times	The PMBus device attempts to restart 3 times. If the device fails to restart, it disables the output and remains off until the fault is cleared as described in Section 10.7. The time between the start of each attempt to restart is set by the value in bits [2:] along with the delay time unit specified for that particular fault.
			100	Retry 4 times	The PMBus device attempts to restart 4 times. If the device fails to restart, it disables the output and remains off until the fault is cleared as described in Section 10.7. The time between the start of each attempt to restart is set by the value in bits [2:] along with the delay time unit specified for that particular fault.
			101	Retry 5 times	The PMBus device attempts to restart 5 times. If the device fails to restart, it disables the output and remains off until the fault is cleared as described in Section 10.7. The time between the start of each attempt to restart is set by the value in bits [2:] along with the delay time unit specified for that particular fault.
			110	Retry 6 times	The PMBus device attempts to restart 6 times. If the device fails to restart, it disables the output and remains off until the fault is cleared as described in Section 10.7. The time between the start of each attempt to restart is set by the value in bits [2:] along with the delay time unit specified for that particular fault.
			111	Retry Continuously	The PMBus device attempts to restart continuously, without limitation, until it is commanded OFF (by the CONTROL pin or OPERATION command or both), bias power is removed, or another fault condition causes the unit to shut down.
2:0	Retry Time and Delay Time		0	1	
			1	2	
			2	4	
			3	8	

© Flex

Bit	Function	Description	Value	Function	Description
		Number of delay time units. Used for either the amount of time the device is to continue operating after a fault is detected or for the amount of time between attempts to restart. The time unit is set in register 0xD2.	4	16	
			5	32	
			6	64	
			7	128	

IOUT_OC_FAULT_LIMIT (0x46)
Description: Output over current limit.

Bit	Description	Format	Unit
15:0	Output over current fault limit.	Linear	A

IOUT_OC_FAULT_RESPONSE (0x47)
Description: Output over current fault response.

Bit	Function	Description	Value	Function	Description
7:6	Response	For all values of bits [7:6],the device: Sets the corresponding fault bit in the status registers and If the device supports notifying the host, it does so.	00	Ignore Fault	The PMBus device continues to operate indefinitely while maintaining the output current at the value set by IOUT_OC_FAULT_LIMIT without regard to the output voltage (known as constant-current or brickwall limiting).
			01	Conditioned constant current	The PMBus device continues to operate indefinitely while maintaining the output current at the value set by IOUT_OC_FAULT_LIMIT as long as the output voltage remains above the minimum value specified by IOUT_OC_LV_FAULT_LIMIT. If the output voltage is pulled down to less than that value, then the PMBus device shuts down and responds according to the Retry setting in bits [5:3].
			10	Delay w/ Const. Current & Retry	The PMBus device continues to operate, maintaining the output current at the value set by IOUT_OC_FAULT_LIMIT without regard to the output voltage, for the delay time set by bits [2:0] and the delay time units for specified in the IOUT_OC_FAULT_RESPONSE . If the device is still operating in current limiting at the end of the delay time, the device responds as programmed by the Retry Setting in bits [5:3].
			11	Disable and Retry	The PMBus device shuts down and responds as programmed by the Retry Setting in bits [5:3].

© Flex

Bit	Function	Description	Value	Function	Description
5:3	Retries	The device attempts to restart the number of times set by these bits. 000b means the device does not attempt a restart. 111b means the device attempts restarting continuously.	000	Do Not Retry	A zero value for the Retry Setting means that the unit does not attempt to restart. The output remains disabled until the fault is cleared (Section 10.7).
			001	Retry Once	The PMBus device attempts to restart 1 time. If the device fails to restart, it disables the output and remains off until the fault is cleared as described in Section 10.7. The time between the start of each attempt to restart is set by the value in bits [2:] along with the delay time unit specified for that particular fault.
			010	Retry Twice	The PMBus device attempts to restart 2 times. If the device fails to restart, it disables the output and remains off until the fault is cleared as described in Section 10.7. The time between the start of each attempt to restart is set by the value in bits [2:] along with the delay time unit specified for that particular fault.
			011	Retry 3 times	The PMBus device attempts to restart 3 times. If the device fails to restart, it disables the output and remains off until the fault is cleared as described in Section 10.7. The time between the start of each attempt to restart is set by the value in bits [2:] along with the delay time unit specified for that particular fault.
			100	Retry 4 times	The PMBus device attempts to restart 4 times. If the device fails to restart, it disables the output and remains off until the fault is cleared as described in Section 10.7. The time between the start of each attempt to restart is set by the value in bits [2:] along with the delay time unit specified for that particular fault.
			101	Retry 5 times	The PMBus device attempts to restart 5 times. If the device fails to restart, it disables the output and remains off until the fault is cleared as described in Section 10.7. The time between the start of each attempt to restart is set by the value in bits [2:] along with the delay time unit specified for that particular fault.

© Flex

Bit	Function	Description	Value	Function	Description
			110	Retry 6 times	The PMBus device attempts to restart 6 times. If the device fails to restart, it disables the output and remains off until the fault is cleared as described in Section 10.7. The time between the start of each attempt to restart is set by the value in bits [2:] along with the delay time unit specified for that particular fault.
			111	Retry Continuously	The PMBus device attempts to restart continuously, without limitation, until it is commanded OFF (by the CONTROL pin or OPERATION command or both), bias power is removed, or another fault condition causes the unit to shut down.
2:0	Retry Time and Delay Time	Number of delay time units. Used for either the amount of time the device is to continue operating after a fault is detected or for the amount of time between attempts to restart. The time unit is set in register 0xD2.	0	1	
			1	2	
			2	4	
			3	8	
			4	16	
			5	32	
			6	64	
			7	128	

IOUT_OC_LV_FAULT_LIMIT (0x48)
Description: Set the output over-current low-voltage fault threshold.

Bit	Description	Format	Unit
15:0	Set the output over-current low-voltage fault threshold.	Vout Mode Unsigned	V

IOUT_OC_WARN_LIMIT (0x4A)
Description: Output over current warning limit.

Bit	Description	Format	Unit
15:0	Output over current warning limit.	Linear	A

OT_FAULT_LIMIT (0x4F)
Description: Over temperature fault limit.

Bit	Description	Format	Unit
15:0	Over temperature fault limit.	Linear	°C

OT_FAULT_RESPONSE (0x50)
Description: Over temperature fault response.

Bit	Function	Description	Value	Function	Description
7:6	Response		00	Ignore Fault	The PMBus device continues operation without interruption.

© Flex

Bit	Function	Description	Value	Function	Description
			01	Perform Retries while Operating	The PMBus device continues operation for the delay time specified by bits [2:0] and the delay time unit specified for that particular fault. If the fault condition is still present at the end of the delay time, the unit responds as programmed in the Retry Setting (bits [5:3]).
			10	Disable and retry	The device shuts down (disables the output) and responds according to the retry setting in bits [5:3].
			11	Disable until Fault Cleared	A fault can cleared in several ways: The bit is individually cleared, The device receives a CLEAR_FAULTS command, a RESET signal (if one exists) is asserted, the output is commanded through the CTRL pin, the OPERATION command, or the combined action of the CTRL pin and OPERATION command, to turn off and then to turn back on, or Bias power is removed from the PMBus device.
5:3	Retries		000	Do Not Retry	A zero value for the Retry Setting means that the unit does not attempt to restart. The output remains disabled until the fault is cleared (Section 10.7).
			001	Retry Once	The PMBus device attempts to restart 1 time. If the device fails to restart, it disables the output and remains off until the fault is cleared as described in Section 10.7. The time between the start of each attempt to restart is set by the value in bits [2:] along with the delay time unit specified for that particular fault.
			010	Retry Twice	The PMBus device attempts to restart 2 times. If the device fails to restart, it disables the output and remains off until the fault is cleared as described in Section 10.7. The time between the start of each attempt to restart is set by the value in bits [2:] along with the delay time unit specified for that particular fault.
			011	Retry 3 times	The PMBus device attempts to restart 3 times. If the device fails to restart, it disables the output and remains off until the fault is cleared as described in Section 10.7. The time between the start of each attempt to restart is set by the value in bits [2:] along with the delay time unit specified for that particular fault.

© Flex

Bit	Function	Description	Value	Function	Description
			100	Retry 4 times	The PMBus device attempts to restart 4 times. If the device fails to restart, it disables the output and remains off until the fault is cleared as described in Section 10.7. The time between the start of each attempt to restart is set by the value in bits [2:] along with the delay time unit specified for that particular fault.
			101	Retry 5 times	The PMBus device attempts to restart 5 times. If the device fails to restart, it disables the output and remains off until the fault is cleared as described in Section 10.7. The time between the start of each attempt to restart is set by the value in bits [2:] along with the delay time unit specified for that particular fault.
			110	Retry 6 times	The PMBus device attempts to restart 6 times. If the device fails to restart, it disables the output and remains off until the fault is cleared as described in Section 10.7. The time between the start of each attempt to restart is set by the value in bits [2:] along with the delay time unit specified for that particular fault.
			111	Retry Continuously	The PMBus device attempts to restart continuously, without limitation, until it is commanded OFF (by the CONTROL pin or OPERATION command or both), bias power is removed, or another fault condition causes the unit to shut down.
2:0	Retry Time and Delay Time	Number of delay time units. Used for either the amount of time the device is to continue operating after a fault is detected or for the amount of time between attempts to restart. The time unit is set in register 0xD2.	0	1	
			1	2	
			2	4	
			3	8	
			4	16	
			5	32	
			6	64	
			7	128	

OT_WARN_LIMIT (0x51)
Description: Over temperature warning limit.

Bit	Description	Format	Unit
15:0	Over temperature warning limit.	Linear	°C

UT_WARN_LIMIT (0x52)
Description: Under temperature warning limit.

Bit	Description	Format	Unit
15:0	Under temperature warning limit.	Linear	°C

UT_FAULT_LIMIT (0x53)
Description: Under temperature fault limit.

© Flex

Bit	Description	Format	Unit
15:0	Under temperature fault limit.	Linear	°C

UT_FAULT_RESPONSE (0x54)
Description: Under temperature fault response.

Bit	Function	Description	Value	Function	Description
7:6	Response		00	Ignore Fault	The PMBus device continues operation without interruption.
			01	Perform Retries while Operating	The PMBus device continues operation for the delay time specified by bits [2:0] and the delay time unit specified for that particular fault. If the fault condition is still present at the end of the delay time, the unit responds as programmed in the Retry Setting (bits [5:3]).
			10	Disable and retry	The device shuts down (disables the output) and responds according to the retry setting in bits [5:3].
			11	Disable until Fault Cleared	A fault can cleared in several ways: The bit is individually cleared, The device receives a CLEAR_FAULTS command, a RESET signal (if one exists) is asserted, the output is commanded through the CTRL pin, the OPERATION command, or the combined action of the CTRL pin and OPERATION command, to turn off and then to turn back on, or Bias power is removed from the PMBus device.
5:3	Retries		000	Do Not Retry	A zero value for the Retry Setting means that the unit does not attempt to restart. The output remains disabled until the fault is cleared (Section 10.7).
			001	Retry Once	The PMBus device attempts to restart 1 time. If the device fails to restart, it disables the output and remains off until the fault is cleared as described in Section 10.7. The time between the start of each attempt to restart is set by the value in bits [2:] along with the delay time unit specified for that particular fault.
			010	Retry Twice	The PMBus device attempts to restart 2 times. If the device fails to restart, it disables the output and remains off until the fault is cleared as described in Section 10.7. The time between the start of each attempt to restart is set by the value in bits [2:] along with the delay time unit specified for that particular fault.

© Flex

Bit	Function	Description	Value	Function	Description
			011	Retry 3 times	The PMBus device attempts to restart 3 times. If the device fails to restart, it disables the output and remains off until the fault is cleared as described in Section 10.7. The time between the start of each attempt to restart is set by the value in bits [2:] along with the delay time unit specified for that particular fault.
			100	Retry 4 times	The PMBus device attempts to restart 4 times. If the device fails to restart, it disables the output and remains off until the fault is cleared as described in Section 10.7. The time between the start of each attempt to restart is set by the value in bits [2:] along with the delay time unit specified for that particular fault.
			101	Retry 5 times	The PMBus device attempts to restart 5 times. If the device fails to restart, it disables the output and remains off until the fault is cleared as described in Section 10.7. The time between the start of each attempt to restart is set by the value in bits [2:] along with the delay time unit specified for that particular fault.
			110	Retry 6 times	The PMBus device attempts to restart 6 times. If the device fails to restart, it disables the output and remains off until the fault is cleared as described in Section 10.7. The time between the start of each attempt to restart is set by the value in bits [2:] along with the delay time unit specified for that particular fault.
			111	Retry Continuously	The PMBus device attempts to restart continuously, without limitation, until it is commanded OFF (by the CONTROL pin or OPERATION command or both), bias power is removed, or another fault condition causes the unit to shut down.
2:0	Retry Time and Delay Time	Number of delay time units. Used for either the amount of time the device is to continue operating after a fault is detected or for the amount of time between attempts to restart. The time unit is set in register 0xD2.	0	1	
			1	2	
			2	4	
			3	8	
			4	16	
			5	32	
			6	64	
			7	128	

VIN_OV_FAULT_LIMIT (0x55)
Description: Input over voltage fault limit.

Bit	Description	Format	Unit
15:0	Input over voltage fault limit.	Linear	V

© Flex

VIN_OV_FAULT_RESPONSE (0x56)
Description: Input over voltage fault response.

Bit	Function	Description	Value	Function	Description
7:6	Response		00	Ignore Fault	The PMBus device continues operation without interruption.
			01	Perform Retries while Operating	The PMBus device continues operation for the delay time specified by bits [2:0] and the delay time unit specified for that particular fault. If the fault condition is still present at the end of the delay time, the unit responds as programmed in the Retry Setting (bits [5:3]).
			10	Disable and retry	The device shuts down (disables the output) and responds according to the retry setting in bits [5:3].
			11	Disable until Fault Cleared	A fault can cleared in several ways: The bit is individually cleared, The device receives a CLEAR_FAULTS command, a RESET signal (if one exists) is asserted, the output is commanded through the CTRL pin, the OPERATION command, or the combined action of the CTRL pin and OPERATION command, to turn off and then to turn back on, or Bias power is removed from the PMBus device.
5:3	Retries		000	Do Not Retry	A zero value for the Retry Setting means that the unit does not attempt to restart. The output remains disabled until the fault is cleared (Section 10.7).
			001	Retry Once	The PMBus device attempts to restart 1 time. If the device fails to restart, it disables the output and remains off until the fault is cleared as described in Section 10.7. The time between the start of each attempt to restart is set by the value in bits [2:] along with the delay time unit specified for that particular fault.
			010	Retry Twice	The PMBus device attempts to restart 2 times. If the device fails to restart, it disables the output and remains off until the fault is cleared as described in Section 10.7. The time between the start of each attempt to restart is set by the value in bits [2:] along with the delay time unit specified for that particular fault.

© Flex

Bit	Function	Description	Value	Function	Description
			011	Retry 3 times	The PMBus device attempts to restart 3 times. If the device fails to restart, it disables the output and remains off until the fault is cleared as described in Section 10.7. The time between the start of each attempt to restart is set by the value in bits [2:] along with the delay time unit specified for that particular fault.
			100	Retry 4 times	The PMBus device attempts to restart 4 times. If the device fails to restart, it disables the output and remains off until the fault is cleared as described in Section 10.7. The time between the start of each attempt to restart is set by the value in bits [2:] along with the delay time unit specified for that particular fault.
			101	Retry 5 times	The PMBus device attempts to restart 5 times. If the device fails to restart, it disables the output and remains off until the fault is cleared as described in Section 10.7. The time between the start of each attempt to restart is set by the value in bits [2:] along with the delay time unit specified for that particular fault.
			110	Retry 6 times	The PMBus device attempts to restart 6 times. If the device fails to restart, it disables the output and remains off until the fault is cleared as described in Section 10.7. The time between the start of each attempt to restart is set by the value in bits [2:] along with the delay time unit specified for that particular fault.
			111	Retry Continuously	The PMBus device attempts to restart continuously, without limitation, until it is commanded OFF (by the CONTROL pin or OPERATION command or both), bias power is removed, or another fault condition causes the unit to shut down.
2:0	Retry Time and Delay Time	Number of delay time units. Used for either the amount of time the device is to continue operating after a fault is detected or for the amount of time between attempts to restart. The time unit is set in register 0xD2.	0	1	
			1	2	
			2	4	
			3	8	
			4	16	
			5	32	
			6	64	
			7	128	

VIN_OV_WARN_LIMIT (0x57)
Description: Input over voltage warning limit.

Bit	Description	Format	Unit
15:0	Input over voltage warning limit.	Linear	V

© Flex

VIN_UV_WARN_LIMIT (0x58)
Description: Input under voltage warning limit. This command set also the input voltage threshold for the HRR function (Hybrid Ratio Regulation). The HRR function is enabled with command MFR_SPECIAL_OPTIONS (0xE0).

Bit	Description	Format	Unit
15:0	Input under voltage warning limit and/or HRR threshold.	Linear	V

VIN_UV_FAULT_LIMIT (0x59)
Description: Input under voltage fault limit.

Bit	Description	Format	Unit
15:0	Input under voltage fault limit.	Linear	V

VIN_UV_FAULT_RESPONSE (0x5A)
Description: Input under voltage fault response.

Bit	Function	Description	Value	Function	Description
7:6	Response		00	Ignore Fault	The PMBus device continues operation without interruption.
			01	Perform Retries while Operating	The PMBus device continues operation for the delay time specified by bits [2:0] and the delay time unit specified for that particular fault. If the fault condition is still present at the end of the delay time, the unit responds as programmed in the Retry Setting (bits [5:3]).
			10	Disable and retry	The device shuts down (disables the output) and responds according to the retry setting in bits [5:3].
			11	Disable until Fault Cleared	A fault can cleared in several ways: The bit is individually cleared, The device receives a CLEAR_FAULTS command, a RESET signal (if one exists) is asserted, the output is commanded through the CTRL pin, the OPERATION command, or the combined action of the CTRL pin and OPERATION command, to turn off and then to turn back on, or Bias power is removed from the PMBus device.
5:3	Retries		000	Do Not Retry	A zero value for the Retry Setting means that the unit does not attempt to restart. The output remains disabled until the fault is cleared (Section 10.7).
			001	Retry Once	The PMBus device attempts to restart 1 time. If the device fails to restart, it disables the output and remains off until the fault is cleared as described in Section 10.7. The time between the start of each attempt to restart is set by the value in bits [2:] along with the delay time unit specified for that particular fault.

© Flex

Bit	Function	Description	Value	Function	Description
			010	Retry Twice	The PMBus device attempts to restart 2 times. If the device fails to restart, it disables the output and remains off until the fault is cleared as described in Section 10.7. The time between the start of each attempt to restart is set by the value in bits [2:] along with the delay time unit specified for that particular fault.
			011	Retry 3 times	The PMBus device attempts to restart 3 times. If the device fails to restart, it disables the output and remains off until the fault is cleared as described in Section 10.7. The time between the start of each attempt to restart is set by the value in bits [2:] along with the delay time unit specified for that particular fault.
			100	Retry 4 times	The PMBus device attempts to restart 4 times. If the device fails to restart, it disables the output and remains off until the fault is cleared as described in Section 10.7. The time between the start of each attempt to restart is set by the value in bits [2:] along with the delay time unit specified for that particular fault.
			101	Retry 5 times	The PMBus device attempts to restart 5 times. If the device fails to restart, it disables the output and remains off until the fault is cleared as described in Section 10.7. The time between the start of each attempt to restart is set by the value in bits [2:] along with the delay time unit specified for that particular fault.
			110	Retry 6 times	The PMBus device attempts to restart 6 times. If the device fails to restart, it disables the output and remains off until the fault is cleared as described in Section 10.7. The time between the start of each attempt to restart is set by the value in bits [2:] along with the delay time unit specified for that particular fault.
			111	Retry Continuously	The PMBus device attempts to restart continuously, without limitation, until it is commanded OFF (by the CONTROL pin or OPERATION command or both), bias power is removed, or another fault condition causes the unit to shut down.
2:0	Retry Time and Delay Time		0	1	
			1	2	
			2	4	
			3	8	

© Flex

Bit	Function	Description	Value	Function	Description
		Number of delay time units. Used for either the amount of time the device is to continue operating after a fault is detected or for the amount of time between attempts to restart. The time unit is set in register 0xD2.	4	16	
			5	32	
			6	64	
			7	128	

POWER_GOOD_ON (0x5E)
Description: Sets the output voltage threshold for asserting PG (Power Good).

Bit	Description	Format	Unit
15:0	The POWER_GOOD_ON command sets the output voltage at which an optional POWER_GOOD signal should be asserted.	Vout Mode Unsigned	V

POWER_GOOD_OFF (0x5F)
Description: If the output voltage is lower than this one, negate power good if power good is enabled through MFR_MULTI_PIN_CONFIG and set the power good bit to 1 in PMBUS status.

Bit	Description	Format	Unit
15:0	If the output voltage is lower than this one, negate power good if power good is enabled through MFR_MULTI_PIN_CONFIG and set the power good bit to 1 in PMBUS status.	Vout Mode Unsigned	V

TON_DELAY (0x60)
Description: Sets the turn-on delay time

Bit	Description	Format	Unit
15:0	Sets the delay time from ENABLE to start of VOUT rise.	Linear	ms

TON_RISE (0x61)
Description: Sets the turn-on transition time.

Bit	Description	Format	Unit
15:0	Sets the rise time of VOUT after ENABLE and TON_DELAY.	Linear	ms

TON_MAX_FAULT_LIMIT (0x62)
Description: Sets an upper limit, in milliseconds, on how long the unit can attempt to power up the output without reaching the output undervoltage fault limit.

Bit	Description	Format	Unit
15:0	A value of 0 milliseconds means that there is no limit and that the unit can attempt to bring up the output voltage indefinitely.	Linear	ms

TON_MAX_FAULT_RESPONSE (0x63)
Description: Only some of the response types are supported.

Bit	Function	Description	Value	Function	Description
7:6	Response		00	Ignore Fault	The PMBus device continues operation without interruption.
			01	Perform Retries while Operating	The PMBus device continues operation for the delay time specified by bits [2:0] and the delay time unit specified for that particular fault. If the fault condition is still present at the end of the delay time, the unit responds as programmed in the Retry Setting (bits [5:3]).

© Flex

Bit	Function	Description	Value	Function	Description
			10	Disable and retry	The device shuts down (disables the output) and responds according to the retry setting in bits [5:3].
			11	Disable until Fault Cleared	A fault can cleared in several ways: The bit is individually cleared, The device receives a CLEAR_FAULTS command, a RESET signal (if one exists) is asserted, the output is commanded through the CTRL pin, the OPERATION command, or the combined action of the CTRL pin and OPERATION command, to turn off and then to turn back on, or Bias power is removed from the PMBus device.
5:3	Retries		000	Do Not Retry	A zero value for the Retry Setting means that the unit does not attempt to restart. The output remains disabled until the fault is cleared (Section 10.7).
			001	Retry Once	The PMBus device attempts to restart 1 time. If the device fails to restart, it disables the output and remains off until the fault is cleared as described in Section 10.7. The time between the start of each attempt to restart is set by the value in bits [2:] along with the delay time unit specified for that particular fault.
			010	Retry Twice	The PMBus device attempts to restart 2 times. If the device fails to restart, it disables the output and remains off until the fault is cleared as described in Section 10.7. The time between the start of each attempt to restart is set by the value in bits [2:] along with the delay time unit specified for that particular fault.
			011	Retry 3 times	The PMBus device attempts to restart 3 times. If the device fails to restart, it disables the output and remains off until the fault is cleared as described in Section 10.7. The time between the start of each attempt to restart is set by the value in bits [2:] along with the delay time unit specified for that particular fault.

© Flex

Bit	Function	Description	Value	Function	Description
			100	Retry 4 times	The PMBus device attempts to restart 4 times. If the device fails to restart, it disables the output and remains off until the fault is cleared as described in Section 10.7. The time between the start of each attempt to restart is set by the value in bits [2:] along with the delay time unit specified for that particular fault.
			101	Retry 5 times	The PMBus device attempts to restart 5 times. If the device fails to restart, it disables the output and remains off until the fault is cleared as described in Section 10.7. The time between the start of each attempt to restart is set by the value in bits [2:] along with the delay time unit specified for that particular fault.
			110	Retry 6 times	The PMBus device attempts to restart 6 times. If the device fails to restart, it disables the output and remains off until the fault is cleared as described in Section 10.7. The time between the start of each attempt to restart is set by the value in bits [2:] along with the delay time unit specified for that particular fault.
			111	Retry Continuously	The PMBus device attempts to restart continuously, without limitation, until it is commanded OFF (by the CONTROL pin or OPERATION command or both), bias power is removed, or another fault condition causes the unit to shut down.
2:0	Retry Time and Delay Time	Number of delay time units. Used for either the amount of time the device is to continue operating after a fault is detected or for the amount of time between attempts to restart. The time unit is set in register 0xD2. TON_MAX_FAULT_RESPONSE time unit is referenced to VOUT FAULT time unit.	0	1	
			1	2	
			2	4	
			3	8	
			4	16	
			5	32	
			6	64	
			7	128	

TOFF_DELAY (0x64)
Description: Sets the turn-off delay.

Bit	Description	Format	Unit
15:0	Sets the delay time from DISABLE to start of VOUT fall.	Linear	ms

TOFF_FALL (0x65)
Description: Sets the turn-off transition time.

Bit	Description	Format	Unit
15:0	Sets the fall time for VOUT after DISABLE and TOFF_DELAY.	Linear	ms

© Flex

TOFF_MAX_WARN_LIMIT (0x66)
Description: Sets an upper limit, in milliseconds, on how long the unit can attempt to power down the output without reaching 12.5% of the output voltage programmed at the time the unit is turned off.

Bit	Description	Format	Unit
15:0		Linear	ms

STATUS_BYTE (0x78)
Description: Returns a brief fault/warning status byte.

Bit	Function	Description	Value	Description
6	Off	This bit is asserted if the unit is not providing power to the output, regardless of the reason, including simply not being enabled.	0	No fault
			1	Fault
5	Vout Overvoltage Fault	An output overvoltage fault has occurred.	0	No fault
			1	Fault
4	Iout Overcurrent Fault	An output overcurrent fault has occurred.	0	No fault
			1	Fault
3	Vin Undervoltage Fault	An input undervoltage fault has occurred.	0	No fault
			1	Fault
2	Temperature	A temperature fault or warning has occurred.	0	No fault
			1	Fault
1	Communication/Logic	A communications, memory or logic fault has occurred.	0	No fault
			1	Fault
0	None of the Above	A fault or warning not listed in bits [7:1] has occurred.	0	No fault
			1	Fault

STATUS_WORD (0x79)
Description: Returns an extended fault/warning status byte.

Bit	Function	Description	Value	Description
15	Vout	An output voltage fault or warning has occurred.	0	No fault
			1	Fault
14	Iout/Pout	An output current or output power fault or warning has occurred.	0	No Fault.
			1	Fault.
13	Input	An input voltage, input current, or input power fault or warning has occurred.	0	No Fault.
			1	Fault.
11	Power-Good	The Power-Good signal, if present, is negated.	0	No Fault.
			1	Fault.
6	Off	This bit is asserted if the unit is not providing power to the output, regardless of the reason, including simply not being enabled.	0	No fault
			1	Fault
5	Vout Overvoltage Fault	An output overvoltage fault has occurred.	0	No Fault.
			1	Fault.
4	Iout Overcurrent Fault	An output overcurrent fault has occurred.	0	No Fault.
			1	Fault.
3	Vin Undervoltage Fault	An input undervoltage fault has occurred.	0	No Fault.
			1	Fault.
2	Temperature	A temperature fault or warning has occurred.	0	No Fault.
			1	Fault.
1	Communication/Logic	A communications, memory or logic fault has occurred.	0	No fault.
			1	Fault.
0	None of the Above	A fault or warning not listed in bits [7:1] has occured.	0	No fault.
			1	Fault.

STATUS_VOUT (0x7A)
Description: Returns Vout-related fault/warning status bits.

Bit	Function	Description	Value	Description
7		Vout Overvoltage Fault.	0	No Fault.

© Flex

Bit	Function	Description	Value	Description
	Vout Overvoltage Fault		1	Fault.
6	Vout Overvoltage Warning	Vout Overvoltage Warning.	0	No Warning.
			1	Warning.
5	Vout Undervoltage Warning	Vout Undervoltage Warning.	0	No Warning.
			1	Warning.
4	Vout Undervoltage Fault	Vout Undervoltage Fault.	0	No Fault.
			1	Fault.
3	Vout Max Warning	Vout Max Warning (An attempt has been made to set the output voltage to value higher than allowed by the Vout Max command (Section 13.5).	0	No Warning.
			1	Warning.
2	Ton Max Fault	Ton-Max Fault.	0	No Fault
			1	Fault.
1	Toff Max Warning	Toff Max Warning.	0	No Warning.
			1	Warning.

STATUS_IOUT (0x7B)
Description: Returns Iout-related fault/warning status bits.

Bit	Function	Description	Value	Description
7	Iout Overcurrent Fault	Iout Overcurrent Fault.	0	No Fault.
			1	Fault.
6	Iout Overcurrent And Low Voltage Fault	Iout Overcurrent and low voltage fault.	0	No Fault.
			1	Fault.
5	Iout Over Current Warning	Iout Overcurrent Warning.	0	No Warning.
			1	Warning.
4	Iout Undercurrent Fault	Iout Undercurrent Fault.	0	No Fault.
			1	Fault.

STATUS_INPUT (0x7C)
Description: Returns VIN/IIN-related fault/warning status bits.

Bit	Function	Description	Value	Description
7	Vin Overvoltage Fault	Vin Overvoltage Fault.	0	No Fault.
			1	Fault.
6	Vin Overvoltage Warning	VIN Overvoltage Warning.	0	No Warning.
			1	Warning.
5	Vin Undervoltage Warning	Vin Undervoltage Warning.	0	No Warning.
			1	Warning.
4	Vin Undervoltage Fault	Vin Undervoltage Fault.	0	No Fault.
			1	Fault.
3	Insufficient Vin	Asserted when either the input voltage has never exceeded the input turn-on threshold Vin-On, or if the unit did start, the input voltage decreased below the turn-off threshold.	0	No Insuffient VIN encountered yet.
			1	Insufficient Unit is off.

STATUS_TEMPERATURE (0x7D)
Description: Returns the temperature-related fault/warning status bits

Bit	Function	Description	Value	Description
7	Overtemperature Fault	Overtemperature Fault.	0	No Fault.
			1	Fault.
6	Overtemperature Warning	Overtemperature Warning.	0	No Warning.
			1	Warning.
5	Undertemperature Warning	Undertemperature Warning.	0	No Warning.
			1	Warning.
4	Undertemerature Fault	Undertemperature Fault.	0	No Fault.
			1	Fault.

© Flex

STATUS_CML (0x7E)
Description: Returns Communication/Logic/Memory-related fault/warning status bits.

Bit	Function	Description	Value	Description
7	Invalid Or Unsupported Command Received	Invalid Or Unsupported Command Received.	0	No Invalid Command Received.
			1	Invalid Command Received.
6	Invalid Or Unsupported Data Received	Invalid Or Unsupported Data Received.	0	No Invalid Data Received.
			1	Invalid Data Received.
5	Packet Error Check Failed	Packet Error Check Failed.	0	No Failure.
			1	Failure.
4	Memory Fault Detected	Memory Fault Detected.	0	No Fault.
			1	Fault.
1	Other Communication Fault	A communication fault other than the ones listed in this table has occurred.	0	No Fault.
			1	Fault.
0	Memory Or Logic Fault	Other Memory Or Logic Fault has occurred.	0	No Fault.
			1	Fault.

READ_VIN (0x88)
Description: Returns the measured input voltage.

Bit	Description	Format	Unit
15:0	Returns the input voltage reading.	Linear	V

READ_VOUT (0x8B)
Description: Returns the measured output voltage.

Bit	Description	Format	Unit
15:0	Returns the measured output voltage.	Vout Mode Unsigned	V

READ_IOUT (0x8C)
Description: Returns the measured output current.

Bit	Description	Format	Unit
15:0	The device will NACK this command when not enabled and not in the USER_CONFIG monitor mode.	Linear	A

READ_TEMPERATURE_1 (0x8D)
Description: Returns the measured temperature (internal).

Bit	Description	Format	Unit
15:0		Linear	°C

READ_TEMPERATURE_2 (0x8E)
Description: Returns the measured temperature (internal).

Bit	Description	Format	Unit
15:0		Linear	°C

READ_DUTY_CYCLE (0x94)
Description: Returns the measured duty cycle in percent.

Bit	Description	Format	Unit
15:0	Returns the target duty cycle during the ENABLE state. The device will NACK this command when not enabled and not in the USER_CONFIG monitor mode.	Linear	%

© Flex

READ_FREQUENCY (0x95)
Description: Returns the measured SYNC frequency.

Bit	Description	Format	Unit
15:0	Returns the measured operating switch frequency. The device will NACK this command when not enabled and not in the USER_CONFIG monitor mode.	Direct	kHz

PMBUS_REVISION (0x98)
Description: Returns the PMBus revision number for this device.

Bit	Function	Description	Value	Function	Description
7:4	Part I Revision	Part I Revision.	0x0	1.0	Part I Revision 1.0.
			0x1	1.1	Part I Revision 1.1.
			0x2	1.2	Part I Revision 1.2.
			0x3	1.3	Part I Revision 1.3.
3:0	Part II Revision	Part II Revision.	0x0	1.0	Part II Revision 1.0.
			0x1	1.1	Part II Revision 1.1.
			0x2	1.2	Part II Revision 1.2.
			0x3	1.3	Part II Revision 1.3.

MFR_ID (0x99)
Description: Sets the Manufacturers ID

Bit	Description	Format
95:0	Maximum of 12 characters.	ASCII

MFR_MODEL (0x9A)
Description: Sets the MFR MODEL string.

Bit	Description	Format
159:0	Maximum of 20 characters.	ASCII

MFR_REVISION (0x9B)
Description: Sets the MFR revision string.

Bit	Description	Format
95:0	Maximum of 12 characters.	ASCII

MFR_LOCATION (0x9C)
Description: Sets the MFR location string.

Bit	Description	Format
95:0	Maximum of 12 characters.	ASCII

MFR_DATE (0x9D)
Description: This command returns the date the regulator was manufactured.

Bit	Description	Format
95:0	Maximum of 12 characters.	ASCII

MFR_SERIAL (0x9E)
Description: This command returns a string of 13 characters and numbers that provides a unique identification of the regulator.

Bit	Description	Format
159:0	Maximum of 20 characters.	ASCII

USER_DATA_00 (0xB0)
Description: User data

© Flex

Bit	Description	Format
127:0	16 bytes of user data.	ASCII

MFR_VIN_OV_WARN_RESPONSE (0xC4)
Description: Input over voltage Warn response.

Bit	Function	Description	Value	Function	Description
7:6	Response		00	Ignore Fault	The PMBus device continues operation without interruption.
			01	Perform Retries while Operating	The PMBus device continues operation for the delay time specified by bits [2:0] and the delay time unit specified for that particular fault. If the fault condition is still present at the end of the delay time, the unit responds as programmed in the Retry Setting (bits [5:3]).
			10	Disable and retry	The device shuts down (disables the output) and responds according to the retry setting in bits [5:3].
			11	Disable until Fault Cleared	A fault can cleared in several ways: The bit is individually cleared, The device receives a CLEAR_FAULTS command, a RESET signal (if one exists) is asserted, the output is commanded through the CTRL pin, the OPERATION command, or the combined action of the CTRL pin and OPERATION command, to turn off and then to turn back on, or Bias power is removed from the PMBus device.
5:3	Retries		000	Do Not Retry	A zero value for the Retry Setting means that the unit does not attempt to restart. The output remains disabled until the fault is cleared (Section 10.7).
			001	Retry Once	The PMBus device attempts to restart 1 time. If the device fails to restart, it disables the output and remains off until the fault is cleared as described in Section 10.7. The time between the start of each attempt to restart is set by the value in bits [2:] along with the delay time unit specified for that particular fault.
			010	Retry Twice	The PMBus device attempts to restart 2 times. If the device fails to restart, it disables the output and remains off until the fault is cleared as described in Section 10.7. The time between the start of each attempt to restart is set by the value in bits [2:] along with the delay time unit specified for that particular fault.

© Flex

Bit	Function	Description	Value	Function	Description
			011	Retry 3 times	The PMBus device attempts to restart 3 times. If the device fails to restart, it disables the output and remains off until the fault is cleared as described in Section 10.7. The time between the start of each attempt to restart is set by the value in bits [2:] along with the delay time unit specified for that particular fault.
			100	Retry 4 times	The PMBus device attempts to restart 4 times. If the device fails to restart, it disables the output and remains off until the fault is cleared as described in Section 10.7. The time between the start of each attempt to restart is set by the value in bits [2:] along with the delay time unit specified for that particular fault.
			101	Retry 5 times	The PMBus device attempts to restart 5 times. If the device fails to restart, it disables the output and remains off until the fault is cleared as described in Section 10.7. The time between the start of each attempt to restart is set by the value in bits [2:] along with the delay time unit specified for that particular fault.
			110	Retry 6 times	The PMBus device attempts to restart 6 times. If the device fails to restart, it disables the output and remains off until the fault is cleared as described in Section 10.7. The time between the start of each attempt to restart is set by the value in bits [2:] along with the delay time unit specified for that particular fault.
			111	Retry Continuously	The PMBus device attempts to restart continuously, without limitation, until it is commanded OFF (by the CONTROL pin or OPERATION command or both), bias power is removed, or another fault condition causes the unit to shut down.
2:0	Retry Time and Delay Time	Number of delay time units. Used for either the amount of time the device is to continue operating after a fault is detected or for the amount of time between attempts to restart. The time unit is set in register 0xD2.	0	1	
			1	2	
			2	4	
			3	8	
			4	16	
			5	32	
			6	64	
			7	128	

MFR_CONFIG_UNUSED_PINS (0xC5)
Description: Define if pins are used (0) or unused (1). MSB defines if unused pins should be configured as input (0) or output low(1). If an unused pin is defined as input the pin must be grounded. If an unused pin is not grounded it should be defined as output low (mainly for backward compatibility).

© Flex

Bit	Function	Description	Value	Function	Description
15	Mfr. FAULT2_CONFIG	If an unused pin is defined as input the pin must be grounded, If an unused pin is not grounded it should be defined as output low.	0	INPUT	
			1	OUTPUT LOW	
14	Mfr. TMS_CONFIG	If an unused pin is defined as input the pin must be grounded, If an unused pin is not grounded it should be defined as output low.	0	INPUT	
			1	OUTPUT LOW	
13	Mfr. TDI_CONFIG	If an unused pin is defined as input the pin must be grounded, If an unused pin is not grounded it should be defined as output low.	0	INPUT	
			1	OUTPUT LOW	
12	Mfr. TDO_CONFIG	If an unused pin is defined as input the pin must be grounded, If an unused pin is not grounded it should be defined as output low.	0	INPUT	
			1	OUTPUT LOW	
11	Mfr. DPWM3B_CONFIG	If an unused pin is defined as input the pin must be grounded, If an unused pin is not grounded it should be defined as output low.	0	INPUT	
			1	OUTPUT LOW	
10	Mfr. DPWM3A_CONFIG	If an unused pin is defined as input the pin must be grounded, If an unused pin is not grounded it should be defined as output low.	0	INPUT	
			1	OUTPUT LOW	
9	Mfr. DPWM2B_CONFIG	If an unused pin is defined as input the pin must be grounded, If an unused pin is not grounded it should be defined as output low.	0	INPUT	
			1	OUTPUT LOW	
8	Mfr. ADC_EXT_TRIG_CONFIG	If an unused pin is defined as input the pin must be grounded, if an unused pin is not grounded it should be defined as output low.	0	INPUT	
			1	OUTPUT LOW	
7	Mfr. Mfr. FAULT2_UTILIZATION	Define if pin is used or unused. Setting a pin to unused with this command overrides other configurations.	0	USED	
			1	UNUSED	
6	Mfr. Mfr. TMS_UTILIZATION	Define if pin is used or unused. Setting a pin to unused with this command overrides other configurations.	0	USED	
			1	UNUSED	
5	Mfr. Mfr. TDI_UTILIZATION	Define if pin is used or unused. Setting a pin to unused with this command overrides other configurations.	0	USED	
			1	UNUSED	
4	Mfr. Mfr. TDO_UTILIZATION	Define if pin is used or unused. Setting a pin to unused with this command overrides other configurations.	0	USED	
			1	UNUSED	
3	Mfr. Mfr. DPWM3B_UTILIZATION	Define if pin is used or unused. Setting a pin to unused with this command overrides other configurations.	0	USED	
			1	UNUSED	
2	Mfr. Mfr. DPWM3A_UTILIZATION	Define if pin is used or unused. Setting a pin to unused with this command overrides other configurations.	0	USED	
			1	UNUSED	
1	Mfr. Mfr. DPWM2B_UTILIZATION	Define if pin is used or unused. Setting a pin to unused with this command overrides other configurations.	0	USED	
			1	UNUSED	
0			0	USED	

© Flex

Bit	Function	Description	Value	Function	Description
	Mfr. ADC_EXT_TRIG_UTILIZATION	Define if pin is used or unused. Setting a pin to unused with this command overrides other configurations.	1	UNUSED	

MFR_RC_LEVEL (0xC6)
Description: Set the Remote control threshold when connected to AD03

Bit	Description	Format	Unit
7:0	Sets the level for triggering the Remote control.	Fixed Point Unsigned	V

MFR_KS_PRETRIG (0xC7)
Description: Value sets the time for pre-trigger a kickstart pulse. Value=0 equals approximately 20us, each unit adds 450ns to this value

Bit	Description	Format	Unit
7:0	Sets the time for pre-trigger a kickstart pulse. Value=0 equals approximately 20us, each unit adds 450ns to this value	Fixed Point Unsigned	us

MFR_FAST_VIN_OFF_OFFSET (0xC8)
Description: Adds an offset to the fast VinOff criteria. The offset value is referenced to VinOff value. This is to shut down the unit in a controlled fashion when Vin is falling fast.

Bit	Description	Format	Unit
7:0	Adds an offset to the fast VinOff criteria.	Fixed Point Unsigned	V

MFR_PGOOD_POLARITY (0xD0)
Description: Power good polarity (1:active high; 0: active low).

Bit	Description	Value	Function	Description
7:0	Power good polarity (1:active high; 0: active low).	0x00	Active Low	
		0x01	Active High	

MFR_FAST_OCP_CFG (0xD1)
Description: Set the fast OCP threshold

Bit	Function	Description	Format	Unit
12:8	OCP samples	Sets the Number of over current samples before trigger the OCP.	Integer Unsigned	samples
6:0	OCP level	Sets the level for triggering the fast OCP, resolution is in 128 divisions of 2.5V referenced to the maximum readout current.	Integer Unsigned	level

Bit	Function	Description	Value	Function	Description
7	Enable/Disable	Enable or disable Fast OCP	0	Disable	Disables Fast OCP
			1	Enable	Enables Fast OCP

MFR_RESPONSE_UNIT_CFG (0xD2)
Description: Defines the basic units 1ms, 10ms, 100ms or 1 sec for each of the four basic responses Vout, Vin, Iout and Temperature. The Configured time is calculated as: Configured time = (Retry Time and Delay Time value in specific Fault response) x (unit in 0xD2)

Bit	Function	Description	Value	Function	Description
7:6	VOUT response delay unit		0	1 ms/unit	
			1	10 ms/unit	
			2	100 ms/unit	

© Flex

Bit	Function	Description	Value	Function	Description
		Set the fault response delay unit according to configured delay time for VOUT_OV_FAULT_RESPONSE and VOUT_UV_FAULT_RESPONSE.	3	1 s/unit	
5:4	Vin response delay unit	Set the fault response delay unit according to configured delay time for VIN_OV_FAULT_RESPONSE and VIN_UV_FAULT_RESPONSE.	0	1 ms/unit	
			1	10 ms/unit	
			2	100 ms/unit	
			3	1 s/unit	
3:2	IOUT response delay unit	Set the fault response delay unit according to configured delay time for IOUT_OC_FAULT_RESPONSE and IOUT_OC_FAULT_RESPONSE.	0	1 ms/unit	
			1	10 ms/unit	
			2	100 ms/unit	
			3	1 s/unit	
1:0	Temperature response delay unit	Set the fault response delay unit according to configured delay time for OT_FAULT_RESPONSE and UT_FAULT_RESPONSE.	0	1 ms/unit	
			1	10 ms/unit	
			2	100 ms/unit	
			3	1 s/unit	

MFR_VIN_SCALE_MONITOR (0xD3)
Description: Vin Scale Monitor at ON and OFF.

Bit	Function	Description	Format
31:16	Mfr. Vin Scale Monitor on	Trimmed offset at ON	Byte Array
15:0	Mfr. Vin Scale Monitor Off	Trimmed Vin Scale at OFF	Byte Array

MFR_PREBIAS_DVDT_CFG (0xD4)
Description: Mfr. prebias dV/dt configuration

Bit	Function	Description	Format	Unit
63:48	Mfr. Maximum allowable positive dVin/dt	This value state the max positive Vin change limit to execute a pre-bias start.	Fixed Point Signed	V/ms
47:32	Mfr. Maximum allowable negative dVin/dt	This value state the max negative Vin change limit to execute a pre-bias start.	Fixed Point Signed	V/ms
31:16	Mfr. Maximum allowable positive dVout/dt	This value state the max positive Vout change limit to execute a pre-bias start.	Fixed Point Signed	V/ms
15:0	Mfr. Maximum allowable negative dVout/dt	This value state the max negative Vout change limit to execute a pre-bias start.	Fixed Point Signed	V/ms

MFR_FILTER_SELECT (0xD5)
Description: Filter coefficient selection

Bit	Description	Format
7:0	Filter coefficient selection with byte 1: 0 = Vout, 1 = Iout, VFF = 2	Integer Unsigned

© Flex

MFR_READ_EVENT (0xD7)
Description: The command is prepared for reading the index that was written to MFR_EVENT_INDEX, is read as a 23-byte block. See MFR_EVENT_INDEX command for more details.

Bit	Function	Description	Format	Unit
183:168	Temperature	Temperature	Linear	°C
167:152	Load Current	Load current.	Linear	A
151:136	Output Voltage	Output voltage.	Vout Mode Unsigned	V
135:120	Input Voltage	Input voltage.	Linear	V
119:112	Manufacturer Specific Status Byte	Manufacturer specific status byte.	Byte Array	
111:104	Status Other	Status other.	Byte Array	
47:16	EVENT Timestamp	Timestamp 100 ms resolution < 13.6 years.	Integer Unsigned	
15:0	Event ID	Event id < 2^16.	Integer Unsigned	

Bit	Function	Description	Value	Description
103	Invalid Or Unsupported Command Received	Invalid Or Unsupported Command Received.	0	No Invalid Command Received.
			1	Invalid Command Received.
102	Invalid Or Unsupported Data Received	Invalid Or Unsupported Data Received.	0	No Invalid Data Received.
			1	Invalid Data Received.
101	Packet Error Check Failed	Packet Error Check Failed.	0	No Failure.
			1	Failure.
100	Memory Fault Detected	Memory Fault Detected.	0	No Fault.
			1	Fault.
97	Other Communication Fault	A communication fault other than the ones listed in this table has occurred.	0	No Fault.
			1	Fault.
96	Memory Or Logic Fault	Other Memory Or Logic Fault has occurred.	0	No Fault.
			1	Fault.
95	Overtemperature Fault	Overtemperature Fault.	0	No Fault.
			1	Fault.
94	Overtemperature Warning	Overtemperature Warning.	0	No Warning.
			1	Warning.
93	Undertemperature Warning	Undertemperature Warning.	0	No Warning.
			1	Warning.
92	Undertemerature Fault	Undertemperature Fault.	0	No Fault.
			1	Fault.
87	Vin Overvoltage Fault	Vin Overvoltage Fault.	0	No Fault.
			1	Fault.
86	Vin Overvoltage Warning	VIN Overvoltage Warning.	0	No Warning.
			1	Warning.
85	Vin Undervoltage Warning	Vin Undervoltage Warning.	0	No Warning.
			1	Warning.
84	Vin Undervoltage Fault	Vin Undervoltage Fault.	0	No Fault.
			1	Fault.
83	Insufficient Vin	Asserted when either the input voltage has never exceeded the input turn-on threshold Vin-On, or if the unit did start, the input voltage decreased below the turn-off threshold.	0	No Insuffient VIN encountered yet.
			1	Insufficient Unit is off.
79	Iout Overcurrent Fault	Iout Overcurrent Fault.	0	No Fault.
			1	Fault.

© Flex

Bit	Function	Description	Value	Description
78	Iout Overcurrent And Low Voltage Fault	Iout Overcurrent and low voltage fault.	0	No Fault.
			1	Fault.
77	Iout Over Current Warning	Iout Overcurrent Warning.	0	No Warning.
			1	Warning.
76	Iout Undercurrent Fault	Iout Undercurrent Fault.	0	No Fault.
			1	Fault.
71	Vout Overvoltage Fault	Vout Overvoltage Fault.	0	No Fault.
			1	Fault.
70	Vout Overvoltage Warning	Vout Overvoltage Warning.	0	No Warning.
			1	Warning.
69	Vout Undervoltage Warning	Vout Undervoltage Warning.	0	No Warning.
			1	Warning.
68	Vout Undervoltage Fault	Vout Undervoltage Fault.	0	No Fault.
			1	Fault.
67	Vout Max Warning	Vout Max Warning (An attempt has been made to set the output voltage to value higher than allowed by the Vout Max command (Section 13.5).	0	No Warning.
			1	Warning.
66	Ton Max Fault	Ton-Max Fault.	0	No Fault
			1	Fault.
65	Toff Max Warning	Toff Max Warning.	0	No Warning.
			1	Warning.
63	Vout	An output voltage fault or warning has occurred.	0	No fault
			1	Fault
62	Iout/Pout	An output current or output power fault or warning has occurred.	0	No Fault.
			1	Fault.
61	Input	An input voltage, input current, or input power fault or warning has occurred.	0	No Fault.
			1	Fault.
59	Power-Good	The Power-Good signal, if present, is negated.	0	No Fault.
			1	Fault.
54	Off	This bit is asserted if the unit is not providing power to the output, regardless of the reason, including simply not being enabled.	0	No fault
			1	Fault
53	Vout Overvoltage Fault	An output overvoltage fault has occurred.	0	No Fault.
			1	Fault.
52	Iout Overcurrent Fault	An output overcurrent fault has occurred.	0	No Fault.
			1	Fault.
51	Vin Undervoltage Fault	An input undervoltage fault has occurred.	0	No Fault.
			1	Fault.
50	Temperature	A temperature fault or warning has occurred.	0	No Fault.
			1	Fault.
49	Communication/Logic	A communications, memory or logic fault has occurred.	0	No fault.
			1	Fault.
48	None of the Above	A fault or warning not listed in bits [7:1] has occured.	0	No fault.
			1	Fault.

MFR_TEMP_COMPENSATION (0xD8)
Description: Mfr. temperature compensation parameter

Bit	Function	Description	Format
63:56	Mfr. Temperature compensation deadtime added 2	MFR_TEMP_COMPENSATION_DT_ADD_2 defines the additional dead time used at temperature levels below temperature threshold 2. Unit is nano seconds. It's an unsigned byte, meaning the value can be 0-255.	Byte Array
55:48	Mfr. Temperature compensation deadtime hysteresis 2	MFR_TEMP_COMPENSATION_DT_HYS_2 defines a level for hysteresis i.e. temperature must rise over this level again before dead times are changed.	Byte Array

© Flex

Bit	Function	Description	Format
47:40	Mfr. Temperature compensation deadtime threshold 2	It is a signed byte with the temperature as an integer (°C). This defines a second temperature level for temperature compensation of dead times.	Byte Array
39:32	Mfr. Temperature compensation deadtime added 1	MFR_TEMP_COMPENSATION_DT_ADD_1 defines the additional dead time used at temperature levels below temperature threshold 1. Unit is nano seconds. It's an unsigned byte, meaning the value can be 0-255.	Byte Array
31:24	Mfr. Temperature compensation deadtime hysteresis 1	MFR_TEMP_COMPENSATION_DT_HYS_1 defines a level for hysteresis i.e. temperature must rise over this level again before dead times are changed.	Byte Array
23:16	Mfr. Temperature compensation deadtime threshold 1	It is a signed byte with the temperature as an integer (°C). This defines the first temperature level for temperature compensation of dead times.	Byte Array
15:8	Mfr. Temperature compensation EDAC slope	The second byte, TEMPERATURE_COMPENSATION_EDAC_SLOPE, sets the slope of the temperature compensation taking place above the EDAC_TEMP_COMP_TRESHOLD level. This is a signed byte in Q8 format. The unit is LSB/°C/256. Example: First byte represents 40°C so EDAC_TEMP_COMP_TRESHOLD = 40. Compensate EDAC with 25mV from 40°C to 120°C. The resolution is 1.6V/1024 = 1.56mV / LSB. To compensate for the 25mV droop over 80°C we need to add 25/80 = 0.3125mV/°C = 0.3125/1.56 LSB/°C = 0.2 LSB/°C to the reference DAC. 0.2*256 = 51 so EDAC_TEMP_COMP_SLOPE = 51	Byte Array
7:0	Mfr. Temperature compensation EDAC threshold	The first byte in the block is EDAC_TEMP_COMP_TRESHOLD. This defines the level where the temperature compensation shall begin. It is a signed byte with the temperature as an integer (°C). Example: First byte represents 40°C so EDAC_TEMP_COMP_TRESHOLD = 40. Compensate EDAC with 25mV from 40°C to 120°C. The resolution is 1.6V/1024 = 1.56mV / LSB. To compensate for the 25mV droop over 80°C we need to add 25/80 = 0.3125mV/°C = 0.3125/1.56 LSB/°C = 0.2 LSB/°C to the reference DAC. 0.2*256 = 51 so EDAC_TEMP_COMP_SLOPE = 51	Byte Array

MFR_SET_ROM_MODE (0xD9)
Description: Sends system into ROM mode. Issue this command before attempting to download new firmware to the controller.

Bit	Description	Format
31:0	Sends system into ROM mode. Issue this command before attempting to download new firmware to the controller.	ASCII

MFR_ISHARE_THRESHOLD (0xDA)
Description: Mfr. current sharing threshold level

Bit	Function	Description	Format	Unit
31:24	Trim limit	Set the trim limit for output voltage. This limit the output voltage to be trimmed to a certain level to prevent max-trim if the controller sense erroneous current.	Integer Unsigned	1.7mv /LSB
15:8	Positive threshold level	Set the threshold level where the output voltage is incremental trimmed to achieve current balance between paralleled devices. The threshold level indicates at what current level the output voltage start increasing. The hysteresis where no current balancing through CTRL pin is done is between the positive and negative threshold levels.	Integer Unsigned	~50m A/LS B

© Flex

Bit	Function	Description	Format	Unit
7:0	Negative threshold level	Set the threshold level where the output voltage is decremental trimmed to achieve current balance between paralleled devices. The threshold level indicates at what current level the output voltage start decreasing. The hysteresis where no current balancing through CTRL pin is done is between the positive and negative threshold levels.	Integer Unsigned	~50mA/LSB

Bit	Function	Description	Value	Function	Description
56	Enable/Disable	Enable or disable Active Current share	0	Disable	Disables active current share
			1	Enable	Enables active current share

MFR_EVENT_INDEX (0xDB)
Description: Writing to this command sets current index to read by the READ_EVENT command. It also provides means to clear the fault section of the event recorder and finding the newest event (equal to number of events stored in the event recorder). 0–47: same value as written. 254: Index of newest record in the life cycle section of the event recorder. 255: Index of newest record in the fault section of the event recorder. 0xAA: The fault section of the event recorder is cleared.

Bit	Description	Format
7:0	Offset value 0-47. 0 is always the oldest event in the fault section of the event recorder. 24 is the oldest event in the life cycle section.	Integer Unsigned

MFR_SELECT_TEMPERATURE_SENSOR (0xDC)
Description: Select which temperature sensor, internal one or external remote temperature sensor, is used.

Bit	Description	Value	Function	Description
0	Select which temperature sensor, internal one or external remote temperature sensor, is used.	0	Internal IC Sensor	Internal IC temperature sensor selected.
		1	External Sensor	External remote temperature sensor selected.

MFR_VIN_OFFSET (0xDD)
Description: Vin offset at ON and OFF.

Bit	Function	Description	Format
31:16	Mfr. Vin Offset on	Trimmed offset at ON	Byte Array
15:0	Mfr. Vin Offset off	Trimmed offset at OFF	Byte Array

MFR_VOUT_OFFSET_MONITOR (0xDE)
Description: Output voltage trim

Bit	Description	Format	Unit
15:0	Output voltage trim	Vout Mode Signed	V

MFR_SPECIAL_OPTIONS (0xE0)
Description: Special option configuration. Bit 0 - Reserved Bit 1 - Reserved Bit 2 - DBV: 0:Disabled 1:Enabled Bit 3 - ART/DLC: 0:Disabled 1:Enabled Bit 5 - DLS: 0:Linear droop 1:Non-linear droop Bit 6 - HRR: 0:Disabled 1:Enabled Bit 7 - Require PEC

Bit	Function	Description	Value	Function	Description
7	Require Packet Error Check	Enables/Disables Packet Error Check. PEC required to increase communication robustness	0		Disabled
			1		Enabled
6			0		Disabled

© Flex

Bit	Function	Description	Value	Function	Description
	Enable HRR, (Hybrid Regulated Ratio)	Enables the HRR, Hybrid Regulated Ratio. This enables the unit to have a duty cycle head room where max duty cycle is avoided.§ The output voltage will follow the input voltage ratio, below the HRR threshold set in command VIN_UV_WARN_LIMIT (0x58).	1		Enabled
5	DLS slope configuration	Setup how the slope of the Vout droop is configured, with linear or non-linear droop.	0	Linear droop	Configured with linear droop
			1	Non-linear droop	Configured with non-linear droop
3	Enable ART/DLC, (Adaptive Ramp-up Time, Dynamic Load Compensation)	Enables/Disables ART/DLC.	0		Disabled
			1		Enabled
2	Enable DBV, (Dynamic Bus Voltage)	Enables/Disables DBV.	0		Disabled
			1		Enabled

MFR_TEMP_OFFSET_INT (0xE1)
Description: Internal temperature offset.

Bit	Description	Format	Unit
15:0	Integer [0.1 °C]	Direct	°C

MFR_REMOTE_TEMP_CAL (0xE2)
Description: External temperature offset and slope.

Bit	Description	Format
31:0	T(C) = slope x ADC(v) + offset, Byte 0 byte 1: offset, Byte 2 byte 3: slope.	Byte Array

MFR_REMOTE_CTRL (0xE3)
Description: Primary Remote Control (RC pin) configuration.

Bit	Function	Description	Value	Function	Description
4	CTRL pin Interaction		0	OR'ed w/ CTRL pin	PriRC is OR:ed with OPERATION and CTRL pin.
			1	AND'ed w/ CTRL pin	PriRC is AND:ed with OPERATION and CTRL pin.
2	Remote CTRL pin Enabled	PriRC Pin Enable: 0:Disabled 1:Enabled	0	Disabled	
			1	Enabled	
1	Remote CTRL pin Polarity	PriRC Polarity: 0:Active High 1:Active Low	0	Active Low	
			1	Active High	
0	Remote Ctrl On/Off	Primary Remote Control (RC Pin) configuration. Bit 0 - PriRC Disable Mode: 0:Soft-Stop 1:Quick Off	0	Soft Stop	Pre-configured ramp down time set TOFF_FALL.
			1	Quick Off	Disables the output immediately.

MFR_VFF_PARAMS (0xE6)
Description: This function is dependent of voltage levels internal to the control IC. It is not recommended to change the parameters Extra compensation, Vin stable threshold and Reference DAC threshold.

© Flex

Bit	Function	Description	Format
31:24	Extra compensation threshold	Set a threshold where extra compensation of the VFF response is needed. The extra compensation cut the duty cycle with 50% during one period. Too low threshold creates false triggering with noisy output voltage.	Integer Unsigned
23:16	Vin stable threshold	Set a threshold where the input voltage is considered stable and a ready for new VFF response	Integer Unsigned
15:8	Reference DAC fast recover threshold	Below this threshold the reference DAC is adjusted one LSB each interrupt (~27us) otherwise it is adjusted 3 LSB.	Integer Unsigned

Bit	Function	Description	Value	Description
0	Enable VFF, (Voltage Feed Forward)		0	Disabled
			1	Enabled

MFR_TEMP_COEFF (0xE7)
Description: Temperature coefficient

Bit	Function	Description	Format	Unit
47:40	Mfr. Temp level 2 Comp Factor	The temperature compensation factor for current sense above temperature level 2, used to compensate IOUT_READ value.	Integer Unsigned	
39:32	Mfr. Temp level 2 Comp	The second temperature level used to compensate IOUT_READ.	Integer Unsigned	°C
31:24	Mfr. Temp level 1 Comp Factor	The temperature compensation factor for current sense above temperature level 1, used to compensate IOUT_READ value.	Integer Unsigned	
23:16	Mfr. Temp level 1 Comp	The first temperature level used to compensate IOUT_READ.	Integer Unsigned	°C
15:0	Mfr. Temp Coeff Cu	The temperature coefficient for copper.	Direct	

MFR_FILTER_COEFF (0xE8)
Description: Mfr. filter coefficients

Bit	Function	Description	Format
215:211	CLA scale	Filter Misc Gain Coefficient: CLA SCALE	Integer Unsigned
210:208	yn scale	Filter Misc Gain Coefficient: YN SCALE	Integer Unsigned
207:192	kcomp	Filter Misc Gain Coefficient: KCOMP	Integer Unsigned
191:176	KD alpha [1]	Filter Coefficient: KD alpha [1]	Integer Unsigned
175:160	KD alpha [0]	Filter Coefficient: KD alpha [0]	Integer Unsigned
159:144	KD coef [2]	Filter Coefficient: KD coef [2]	Integer Unsigned
143:128	KD coef [1]	Filter Coefficient: KD coef [1]	Integer Unsigned
127:112	KD coef [0]	Filter Coefficient: KD coef [0]	Integer Unsigned
111:96	KI coef [3]	Filter Coefficient: KI coef [3]	Integer Unsigned
95:80	KI coef [2]	Filter Coefficient: KI coef [2]	Integer Unsigned
79:64	KI coef [1]	Filter Coefficient: KI coef [1]	Integer Unsigned
63:48	KI coef [0]	Filter Coefficient: KI coef [0]	Integer Unsigned
47:32	KP coef [2]	Filter Coefficient: KP coef [2]	Integer Unsigned
31:16	KP coef [1]	Filter Coefficient: KP coef [1]	Integer Unsigned
15:0	KP coef [0]	Filter Coefficient: KP coef [0]	Integer Unsigned

© Flex

MFR_FILTER_NLR_GAIN (0xE9)
Description: Mfr. filter nlrgains

Bit	Function	Description	Format
121:120	AFE Gain	AFE gain	Integer Unsigned
95:80	limit5	Filter Coefficient: LIMIT 5	Integer Unsigned
79:64	limit4	Filter Coefficient: LIMIT 4	Integer Unsigned
63:48	limit3	Filter Coefficient: LIMIT 3	Integer Unsigned
47:32	limit2	Filter Coefficient: LIMIT 2	Integer Unsigned
31:16	limit1	Filter Coefficient: LIMIT 1	Integer Unsigned
15:0	limit0	Filter Coefficient: LIMIT 0	Integer Unsigned

Bit	Function	Description	Value	Function	Description
127:125	Bin Configuration (6)	Bin Configuration (6)	0	Coef [0]	
			1	Coef [1]	
			2	Coef [2]	
			3	Coef [3]	
			4	Coef [4]	
			5	Coef [5]	
			6	Coef [6]	
124	Bin Alpha (6)	Bin Alpha (6)			
123	NL Mode	NL Mode			
122	Auto Gear Shift	Auto Gear Shift			
119:117	Bin Configuration (4)	Bin Configuration (4)	0	Coef [0]	
			1	Coef [1]	
			2	Coef [2]	
			3	Coef [3]	
			4	Coef [4]	
			5	Coef [5]	
			6	Coef [6]	
116	Bin Alpha (4)	Bin Alpha (4)			
115:113	Bin Configuration (5)	Bin Configuration (5)	0	Coef [0]	
			1	Coef [1]	
			2	Coef [2]	
			3	Coef [3]	
			4	Coef [4]	
			5	Coef [5]	
			6	Coef [6]	
112	Bin Alpha (5)	Bin Alpha (5)			
111:109	Bin Configuration (2)	Bin Configuration (2)	0	Coef [0]	
			1	Coef [1]	
			2	Coef [2]	
			3	Coef [3]	
			4	Coef [4]	
			5	Coef [5]	
			6	Coef [6]	
108	Bin Alpha (2)	Bin Alpha (2)			
107:105	Bin Configuration (3)	Bin Configuration (3)	0	Coef [0]	
			1	Coef [1]	
			2	Coef [2]	
			3	Coef [3]	
			4	Coef [4]	
			5	Coef [5]	
			6	Coef [6]	
104	Bin Alpha (3)	Bin Alpha (3)			
103:101	Bin Configuration (0)	Bin Configuration (0)	0	Coef [0]	
			1	Coef [1]	
			2	Coef [2]	
			3	Coef [3]	

© Flex

Bit	Function	Description	Value	Function	Description
			4	Coef [4]	
			5	Coef [5]	
			6	Coef [6]	
100	Bin Alpha (0)	Bin Alpha (0)			
99:97	Bin Configuration (1)	Bin Configuration (1)	0	Coef [0]	
			1	Coef [1]	
			2	Coef [2]	
			3	Coef [3]	
			4	Coef [4]	
			5	Coef [5]	
			6	Coef [6]	
96	Bin Alpha (1)	Bin Alpha (1)			

MFR_MIN_DUTY (0xEB)
Description: Set the minimum duty cycle and minimum deadtime at min duty.

Bit	Function	Description	Format	Unit
15:8	Mfr. Min duty		Integer Unsigned	ns
7:0	Mfr. Minimum deadtime		Integer Unsigned	ns

MFR_ACTIVE_CLAMP (0xEC)
Description: Active clamp

Bit	Function	Description	Format	Unit
14:8	Mfr. pulse delay	Set the delay of the pulse to the active clamp.	Integer Unsigned	x4 ns
7:0	Mfr. pulse width	Set the pulse width to the active clamp.	Integer Unsigned	x4 ns

Bit	Function	Description	Value	Function	Description
15	Active Clamp mode	Set the mode of the active clamp, 1x frequency A and B output inverted outputs phase/2x frequency on A only non-inverted	0	1x frequency inverted	Set 1x frequency inverted
			1	2x frequency non-inverted	Set2x frequency non-inverted

MFR_OFFSET_ADDRESS (0xEE)
Description: Value (n) add an offset to the address on SA0 pin.

Bit	Description	Format	Unit
7:0		Integer Unsigned	n + SA0

MFR_DBV_CONFIG (0xEF)
Description: Configuration of Dynamic Bus Voltage.

Bit	Function	Description	Format	Unit
47:40	Iout Level mid to high	Iout level mid to high transition.	Fixed Point Unsigned	A
39:32	Iout Level high to mid	Iout level high to mid transition.	Fixed Point Unsigned	A
31:24	Output Voltage Mid	Output Voltage Mid.	Fixed Point Unsigned	V
23:16	Iout Level low to mid	Iout level low to mid transition.	Fixed Point Unsigned	A
15:8	Iout Level mid to low	Iout level mid to low transition.	Fixed Point Unsigned	A

© Flex

Bit	Function	Description	Format	Unit
7:0	Output Voltage Low	Output Voltage Low.	Fixed Point Unsigned	V

MFR_DEBUG_BUFF (0xF0)
Description: Output contents in debug_buf.

Bit	Description	Format
63:0	Output contents in debug_buf.	Byte Array

MFR_SETUP_PASSWORD (0xF1)
Description: Once a valid new password is sent, the security is turned on.

Bit	Description	Format
95:0	A write is current password (6 bytes, default "000000000000") + new password (6 bytes) A read returns: 0x000000000000000000000000 if security is off 0x000000000000000000000001 if security is on 0x000000000000000000000002 if security setup is locked up due to incorrect password entry	ASCII

MFR_DISABLE_SECURITY_ONCE (0xF2)
Description: When security is on, this command is used to temporarily disable the security before the next power reset of the digital PWM controller so that a host can send any command that is either write-protected or sendbyte-protected based on a security bit mask. When security is off, this command will be NACKed.

Bit	Description	Format
47:0	A write is current password (after it was set up with MFR_SETUP_PASSWORD).	ASCII

MFR_SECURITY_BIT_MASK (0xF4)
Description: This command is used to individually enable or disable security feature for a write-protectable or sendbyte-protectable PMBUS command.

Bit	Description	Format
255:0	When protection is enabled for a PMBUS command and when security is on, the PMBUS command is write-protected or send- byte-protected.	Byte Array

MFR_TRANSFORMER_TURN (0xF5)
Description: Transformer turn ratio.

Bit	Function	Description	Format
7:4	Mfr. Primary Turn	Number of turn on the primary side of transformer.	Integer Unsigned
3:0	Mfr. secondary Turn	Number of turn on the secondary side of transformer.	Integer Unsigned

MFR_OSC_TRIM (0xF6)
Description: Internal clock frequency trim value

Bit	Description	Format
7:0	Internal clock frequency trim value.	Integer Unsigned

MFR_DLC_CONFIG (0xF7)
Description: Configuration of Dynamic Load Compensation at start up.

Bit	Function	Description	Format	Unit
63:56	Ramp Factor 3, (K3)	Ramp factor for third limit.The value in Ramp Factor 3 is multiplied with the TON_RISE value, to calculate a new TON_RISE slope. The new calculated slope will immediately act as TON_RISE	Fixed Point Signed	

© Flex

Bit	Function	Description	Format	Unit
55:48	Third Limit	Third limit for adjustment. When the capacitance estimation reaches over the third limit RAMP_FACTOR_3 is used and the PID setting in Bank 3 is chosen. To change PID settings in Bank 3, 0xD5 must be set to 0x03 after that 0xE8 and 0xE9 can be adjusted.	Fixed Point Signed	mF
47:40	Ramp Factor 2, (K2)	Ramp factor for second limit. The value in Ramp Factor 2 is multiplied with the TON_RISE value, to calculate a new TON_RISE slope. The new calculated slope will immediately act as TON_RISE	Fixed Point Signed	
39:32	Second Limit	Second limit for adjustment. When the capacitance estimation reach over the second limit RAMP_FACTOR_2 is used.	Fixed Point Signed	mF
31:24	Ramp Factor 1, (K1)	Ramp factor for first limit. The value in Ramp Factor 1 is multiplied with the TON_RISE value, to calculate a new TON_RISE slope. The new calculated slope will immediately act as TON_RISE	Fixed Point Signed	
23:16	First Limit	First limit for adjustment. When the capacitance estimation reach over the first limit RAMP_FACTOR_1 is used.	Fixed Point Signed	mF
15:8	Voltage End	Set the end level on the Vout ramp ON for the output cap estimation measurement.	Fixed Point Signed	V
7:0	Voltage Start	Set the start and end levels on the Vout ramp ON for the output cap estimation measurement.	Fixed Point Signed	V

MFR_ILIM_SOFTSTART (0xF8)
Description: During soft start ILIM is more than the user setting. The value set in this command is in % added ILIM.

Bit	Description	Format	Unit
7:0		Integer Unsigned	%

MFR_MULTI_PIN_CONFIG (0xF9)
Description: The MFR_MULTI_PIN_CONFIG command can be re-configured to enable or disable different functions and set the pin configuration of the digital header (K400) (pin 6-15).

Bit	Function	Description	Value	Function	Description
10-15		Reserved			
9	SALERT as PG	SALERT pin shall be used for PG signal	0	Standard operation	
			1	SALERT as PG	Setting this bit will inhibit PG on pin 21 (TCK)
8	CTRL_CS as PG	CTRL_CS pin shall be used for PG signal	0	Standard operation	
			1	CTRL_CS as PG	Setting this bit will inhibit PG on pin 21 (TCK)
7	Or PG with SALERT	These bits enable or disable the PG with Salert.	0	Disabled	
			1	PG with SALERT	PG shall include SALERT status i.e. “power not good” whenever SALERT is set, regardless of Vout.
6:5	Sync Mode	These bits enable or disable the SYNC function. When enabling choose between SYNC OUT or SYNC IN.	00	Disabled	
			01	Sync in	When the product is configured to SYNC in it will synchronize its switching frequency to the product configured as SYNC out. The switching phases can be spread individually using the INTERLEAVE command 0x37
			10	Sync out	When the product is configured to SYNC out it will send out a SYNC signal that BMR90 products can connect its SYNC in pin. Only 1 product i a group can be configured to SYNC out.

© Flex

Bit	Function	Description	Value	Function	Description
3	SA1 as Sync	Change function of Pin 9 on the digital header (K400). This pin can be used as SA1 or SYNC in/out	0	SA1 normal	Pin 9 configured to set the PMBus address with a resistor connected to pin 9
			1	SA1 as Sync	Pin 9 configured to be used as SYNC input/output
2	Power Good Enable	This bit enable or disable the Power Good function	0	Disabled	
			1	Enabled	
1	Power Good Output	Two output options are available for Power Good output, it is Push/Pull or Open Drain	0	Push/Pull	Power Good configured Push/Pull
			1	Open Drain	Power Good configured Open Drain
0	CTRL Internal Resistor	Using CTRL internal resistor can be useful if no external pull up or pull down resistor exist or no Digital header (K400) is mounted.	0	Disabled	
			1	Enabled	

MFR_ADDED_DROOP_DURING_RAMP (0xFC)
Description: Set an added droop during ramp.

Bit	Description	Format	Unit
15:0	Sets an added effective load line (V/I slope) for the rail in which the device is used, during ramp up.	Linear	mV/A

MFR_FIRMWARE_DATA (0xFD)
Description: This is a 20-byte block that contains device ID and versions of the firmware.

Bit	Description	Format
159:0	This is a 20-byte block that contains device ID and versions of the firmware.	Byte Array

MFR_RESTART (0xFE)
Description: Writing the string “ERIC” to this command code forces the unit to restart.

Bit	Description	Format
31:0		ASCII